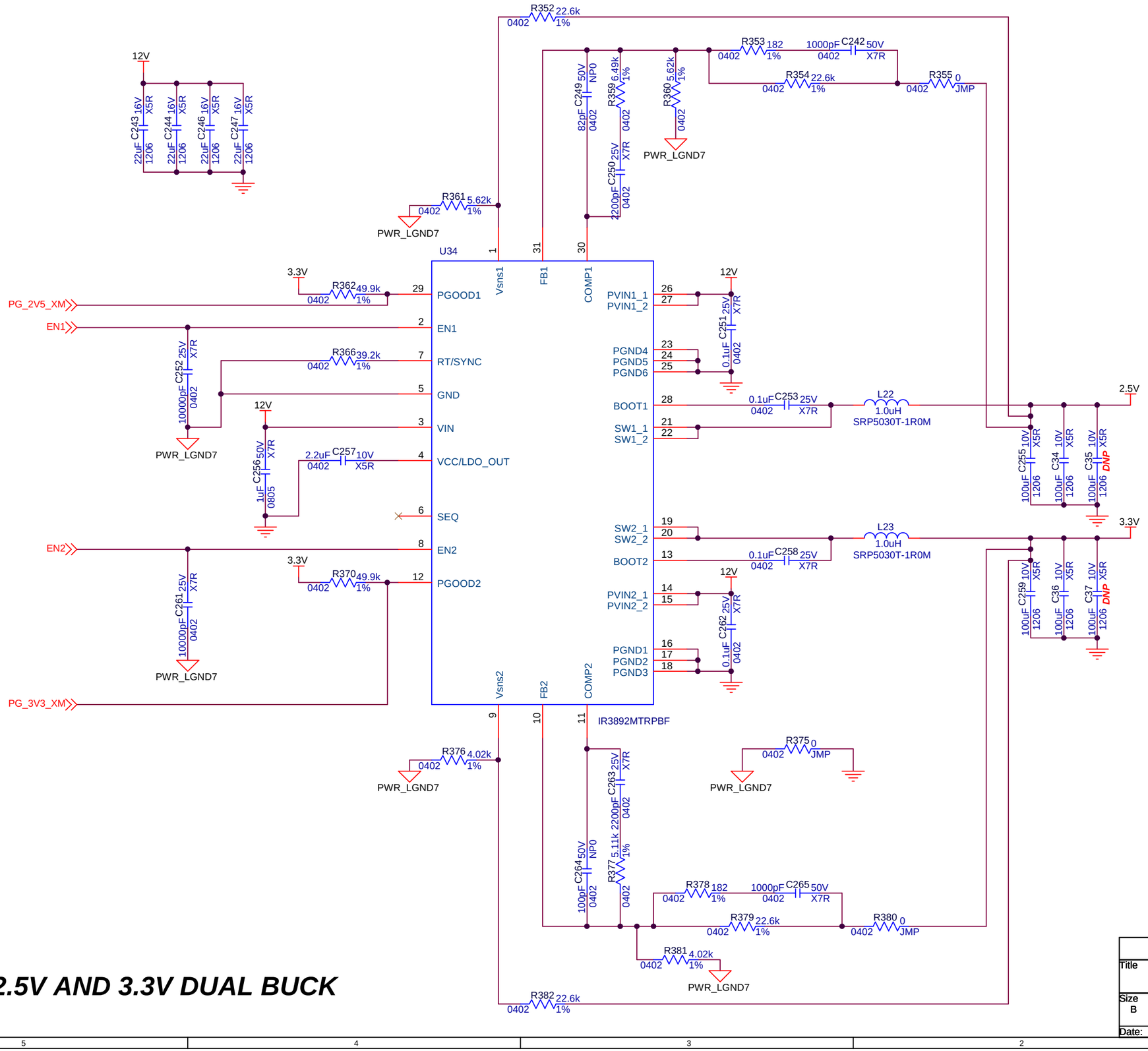

IR3892 2.5V AND 3.3V DUAL BUCK

Infineon		
Title	IR3892 2.5V_3.3V	
Size B	Document Number	Rev E1
Date: Thursday, September 01, 2016	Sheet 1 of 1	