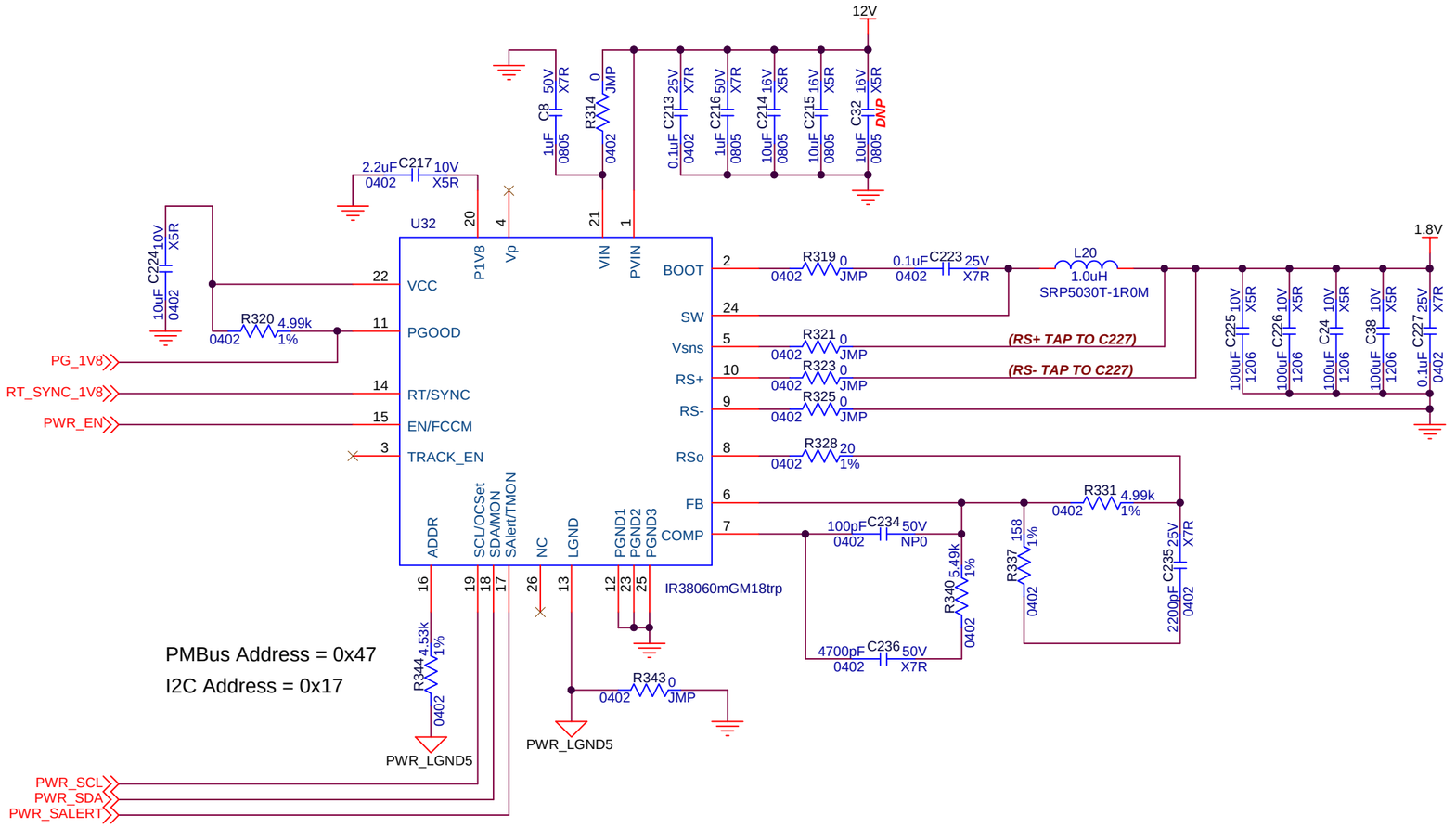

IR38060 1.8V BUCK

Infineon

Title	IR38060 1.8V	
Size B	Document Number	Rev E1
Date: Thursday, September 01, 2016	Sheet 1 of 1	