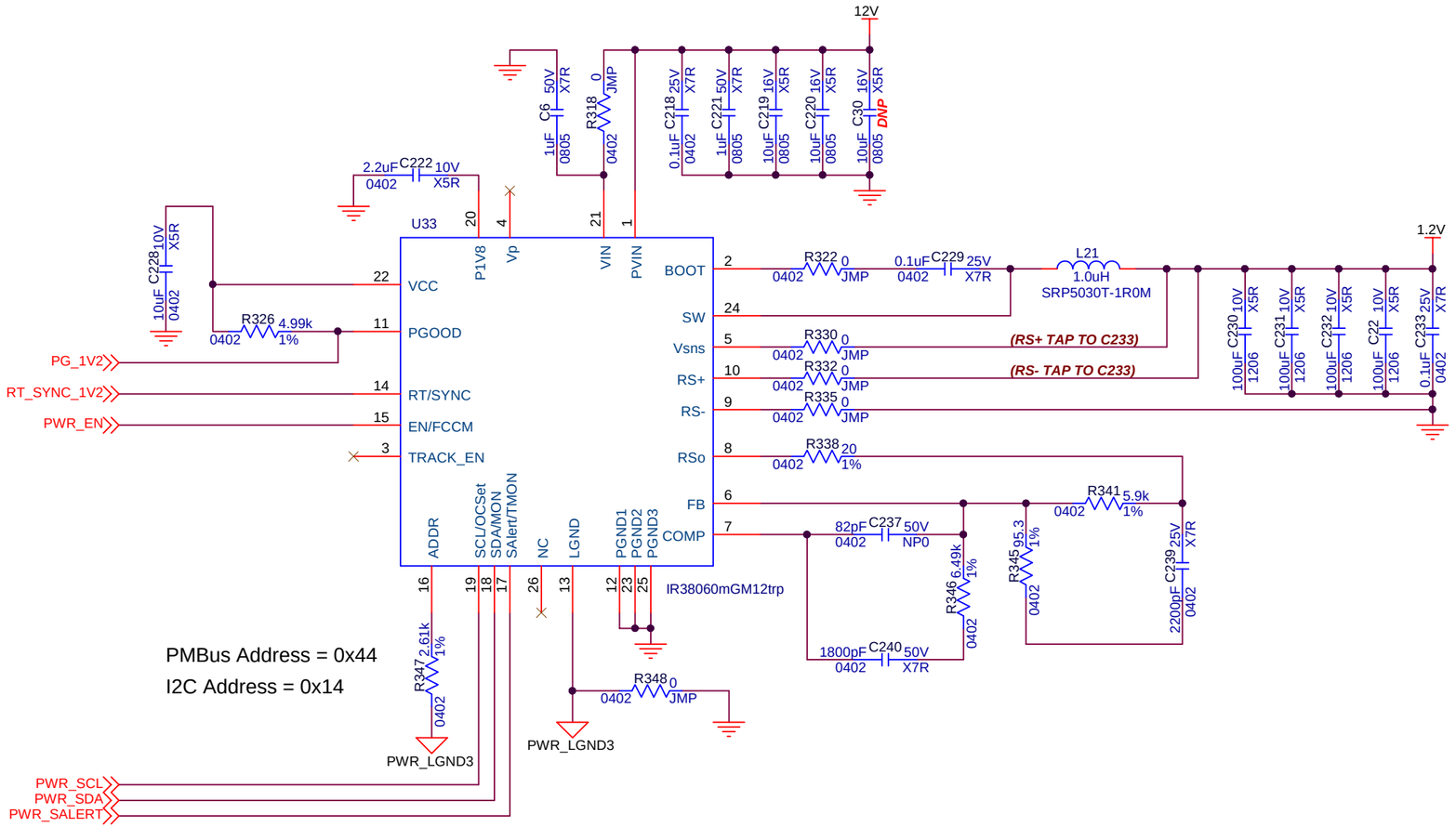

IR38060 1.2V BUCK

Infineon

Title: IR38060 1.2V		
Size: B	Document Number:	Rev: E1
Date: Thursday, September 01, 2016	Sheet 1 of 1	