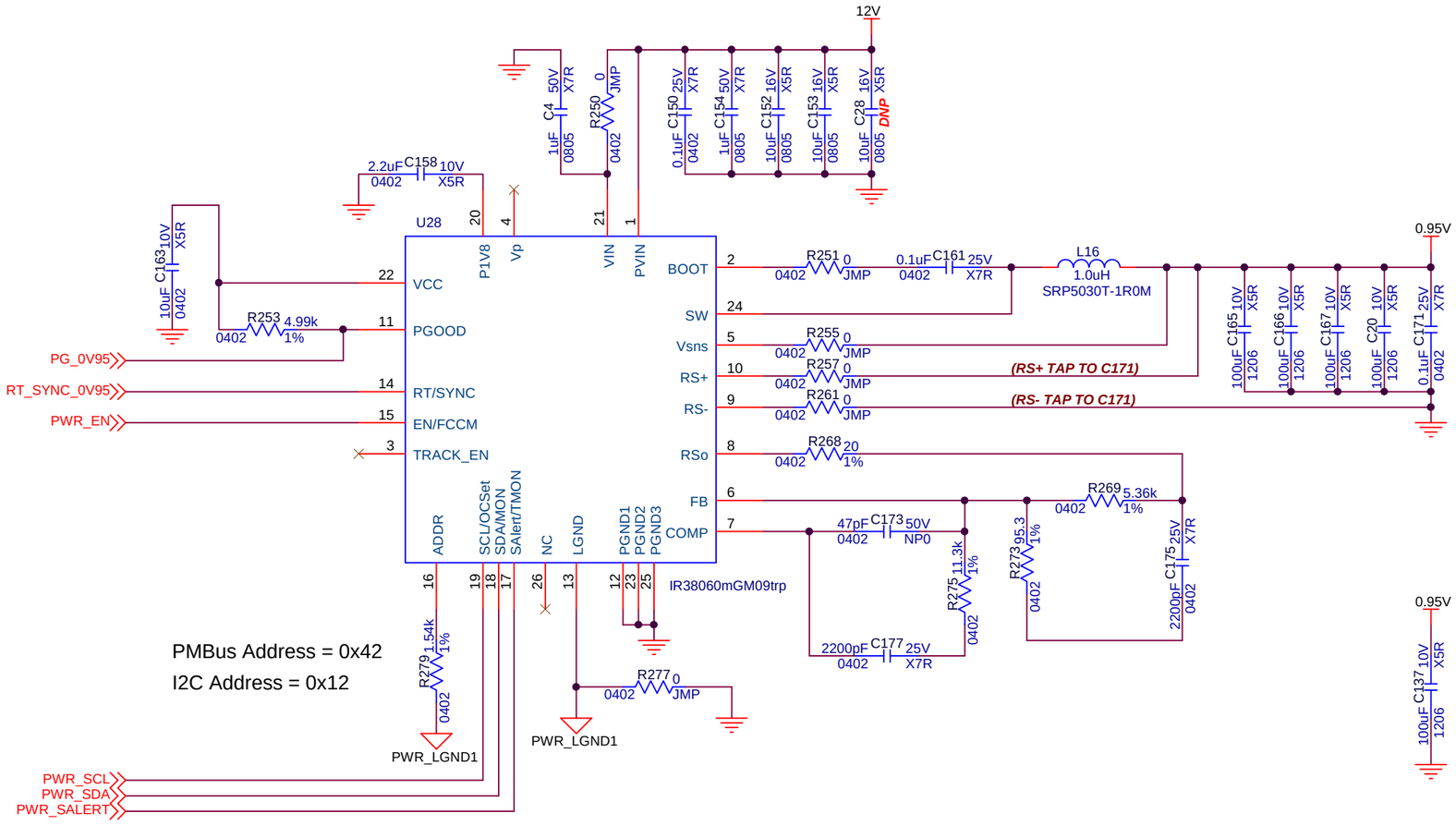

IR38060 0.95V BUCK

Infineon		
Title	IR38060_0.95V	
Size B	Document Number	Rev E1
Date: Thursday, September 01, 2016	Sheet 1 of 1	