Power Solutions for XILINX FPGAs & SoCs

Wide Selection of DC/DC power products for FPGAs

Infineon has a wide range of DC/DC power products for Xilinx FPGA/SoC families: Artix, Zynq, Spartan, Kintex, Virtex.

Shown below is a design for Zynq 7 Series SoC-FPGA Family. Various solutions are shown to scale the core, platform and SERDES voltage and current requirements.

Zynq 7 Series: 7k70/160/325/410/420/480

HIGHLIGHTS

Design options for Analog or Digital SupIRBucks

Only two components types required: IR3899 and IR3823.

IR3899 9A; IR3823 3A Single POL for core, platform and SERDES voltages:
1V for up to 9A; 1.8V, 1.0V, 1.2V, 1.5V from 1A to 3A

For tighter board space constrained applications, the IR3891 Dual DC/DC Buck Regulators can be used.

For advanced power applications, PMBUS SupIRbucks, IR38060 and IR38062 can be used for integrated voltage setting, margining, telemetry and sequencing.

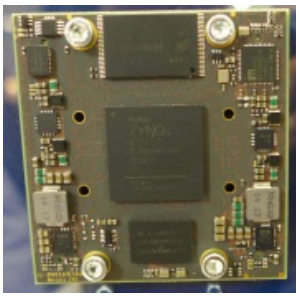

Customer example: Infineon DC/DC Power for Zynq 7 FPGA modules

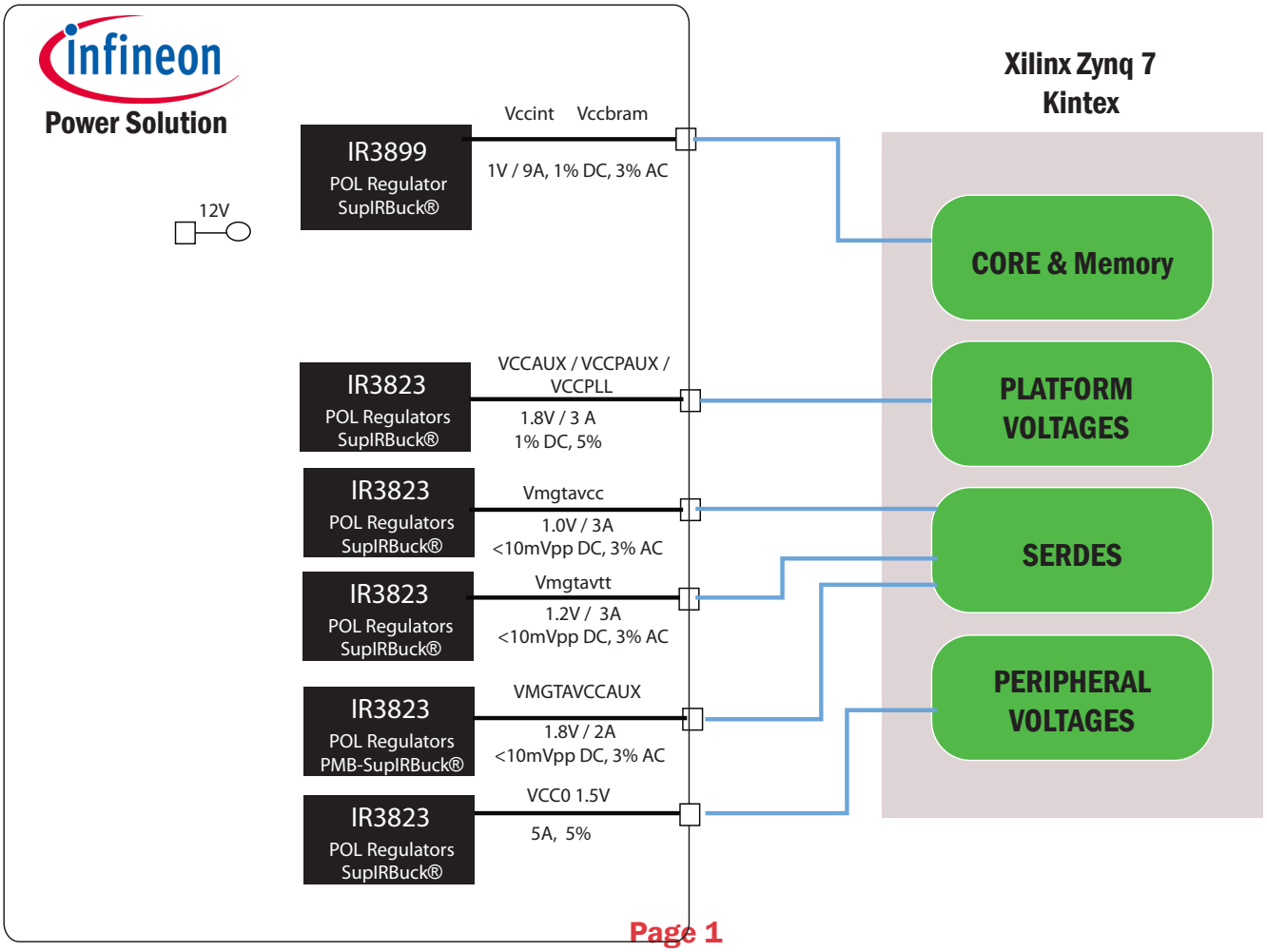

Power Solutions for Xilinx FPGAs & SoCs

Zynq 7 Series: 7k70/160/325/410/420/480

PowerDESK DESIGN TOOL

The table below list the PowerDESK Design Tool files for each of the regulators.
Click the Device and URL in the table below to view the datasheets & design: schematics, components optimization.

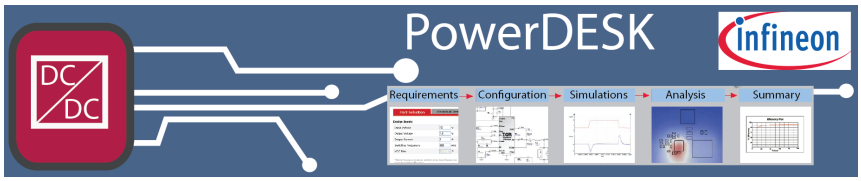

https://infineon.transim.com/powerdesk

FPGA Power Section	Description	Device	URL
Core Voltage	VCCINT / VCCBRAM 1V 10A / 6A	Digital: IR38062 – 10A IR38060 – 6A	IR38062 http://go.transim.com/Ck6
Core Voltage	VCCINT / VCCBRAM 1V 9A / 6A	Analog: IR3899 – 9A IR3898 – 6A	IR3899 http://go.transim.com/rdj
Platform Voltage	VCCAUX / VCCPAUX / VCCPLL 1.8V / 2A	Analog: IR3823 – 3A IR3883 – 3A Digital: IR38060	IR3823 http://go.transim.com/iaz
Platform Voltage	VCCO 1.5V / 1A	Analog: IR3823 – 3A IR3883 – 3A	
SERDES Voltage	VMGTAVCCAUX 1.8V / 1A Up to 16 ch / 325 series	Analog: IR3823 – 3A	IR3823 http://go.transim.com/iaz
SERDES Voltage	VMGTAVCC 1.0V / 3A Up to 16 ch / 325 series	Analog: IR3823 – 3A IR3891 – 2x -4A*	IR3823 http://go.transim.com/b1g
SERDES Voltage	VMGTAVCCAVTT 1.2V / 3A Up to 16 ch / 325 series	Analog: IR3823 – 3A IR3891 – 2x -4A*	IR3823 http://go.transim.com/qav

Design Notes:

1) IR3899, IR3897, IR3898 are simple Analog DC/DC Regulators with Integrated FETs and ideal for the Vcore rail of the Zynq 7 Series, scalable from 4A to 9A. If higher current needed, see IR3894 and IR3895.
2) IR38060/38062 are PMBus SupIRBucks if Vout setting, margining, telemetry & fault management required.
3) IR38062 rated for 15A so could be good for applications with higher Temperature ambient in application.
4) * IR3891 is a Dual Output DC/DC, ideal for space savings. Good for low noise SERDES.
   Could combine the VMGTAVCC and VMGTAVCCAVTT in one device to control sequencing off one enable.
   Low ripple design.
   See Artix Design.

Power Solutions for Xilinx FPGAs & SoCs

EVALUATION BOARDS AVAILABLE

Part	Evaluation Board	
IR3899	IRDC3899	view
IR3823	IRDC3823	view
IR38060	IRDC38060	view
IR38062	IRDC38062	view
IR3891	IRDC3891	view
IR3883	IRDC3883	coming soon
IR3898	IRDC3898	view

Zynq 7 Series: 7k70/160/325/410/420/480

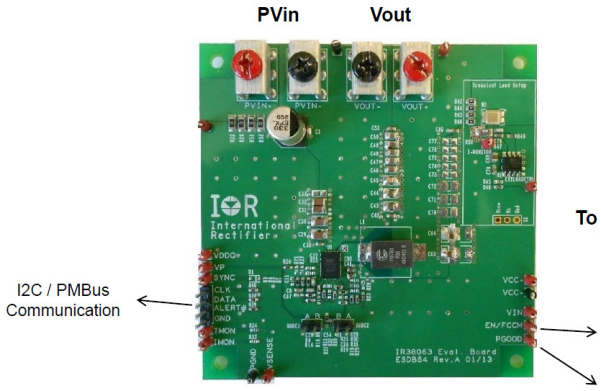

DC/DC Products - All Xilinx FPGAs

	Zynq	Artix	Kintex	Virtex
Core Voltage	Analog: IR3447/48 IR3895 IR3899 IR3898 IR3897 IR3891 IR3823 Digital: IR38060 IR38063 IR38064 IRPS5401	Analog: IR3897 IR3891 Digital: IR38060	Analog: IR3899 IR3898 IR3897 IR3823 Digital: IR38060 IR38062 IR38063	Digital: IR36021, IR3820x IR3550 , IR3742 Analog: IR3847 IR3848 Digital: IR38063 IR38064
Platform Voltages	Analog: IR3891 IR3897 IR3823 IR3883	Analog: IR3891	Analog: IR3892 IR3891	Analog: IR3892 IR3891 IR3899 IR3894
SERDES Voltages	Analog: IR3897 IR3892 IR3891 IR3823 Digital: IR38060	IR3891 IR3823	Analog: IR3897 IR3892 IR3891 IR3823	Analog: IR3847 IR3846 Digital: IR38062 IR38063
Peripheral Voltages	Analog IR3883	Analog IR3883	Analog IR3883	Analog IR3883 IR3899 IR3894