

Hybrid Flyback Controller XDPS22-Series - Understanding the Topology

Overview

- The Hybrid Flyback (HFB) Topology
- HFB vs. other DC - DC topologies
- Advantages of the HFB topology
- Limitations of the HFB topology and application proposal
- Selection guide of DC - DC topologies in off-line single-stage applications

[Owner: Dr. J. Hu Doc ID: Vers.: V1.0.0]

Copyright © Infineon Technologies AG 2026. All rights reserved.

The Hybrid Flyback Topology

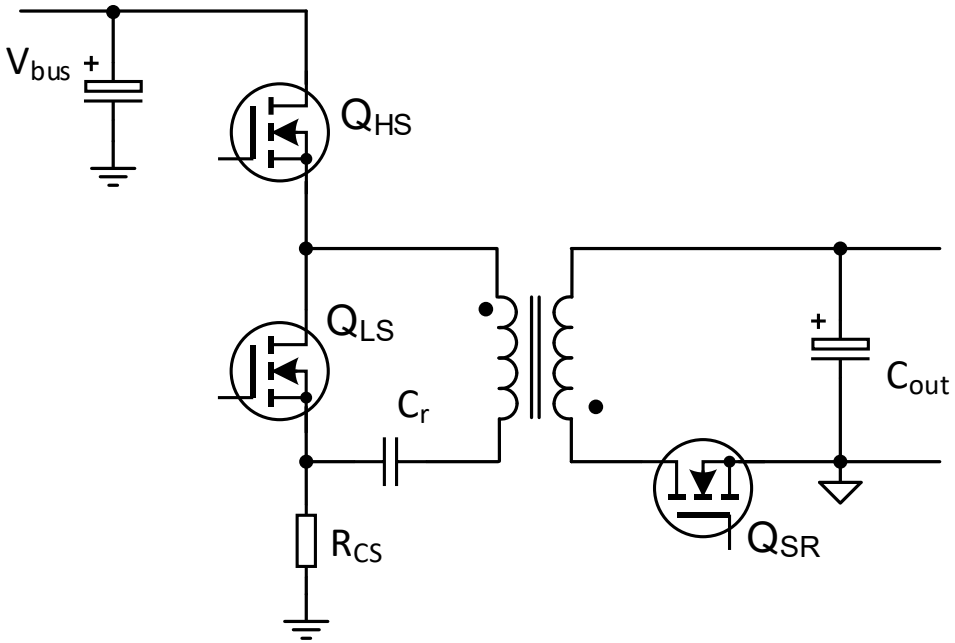

- Hybrid flyback topology known as asymmetrical half-bridge flyback, as well
- Parasitic components of the switches utilized for the zero-voltage switching

[Owner: Dr. J. Hu Doc ID: Vers.: V1.0.0]

Copyright © Infineon Technologies AG 2026. All rights reserved.

HFB vs. Other DC-DC Topologies

Improved efficiency

Active clamp flyback (ACF)

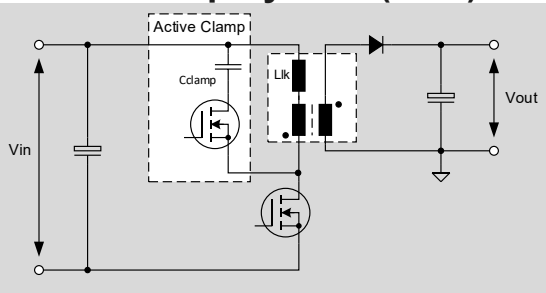

- ✓ Recycling the leakage energy
- ✓ ZVS or valley turn-on
- ✓ Better efficiency
- ✓ Better EMI performance
- - Two high voltage switches

QR/ZVS flyback

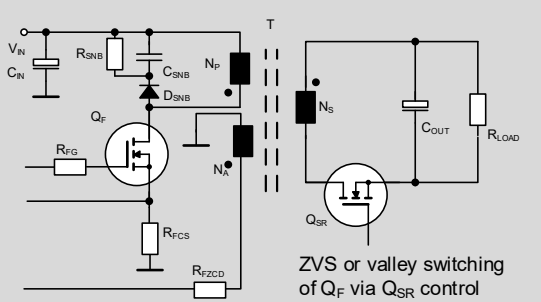

- ✓ QR/ZVS
- ✓ Better efficiency
- ✓ Better EMI performance
- - Special SR controller or other means

Conventional flyback w. snubber

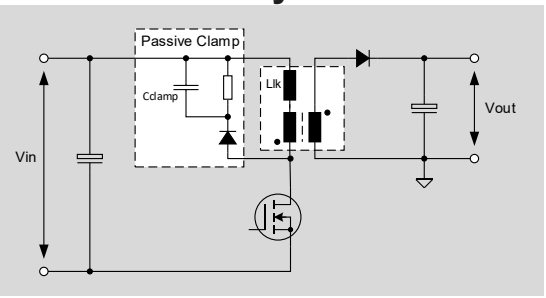

- - Energy in the leakage inductance lost
- - Low efficiency
- - High thermal generation

- Buck-boost conversion
- Same transformer size

- ✓ Smaller transformer: high power density
- ✓ Lower breakdown voltage rating for switches / output rectifier: low costs
- ✓ Recycling the leakage energy: high efficiency
- ✓ ZVS for primary side switches: better EMI

Hybrid flyback (HFB)

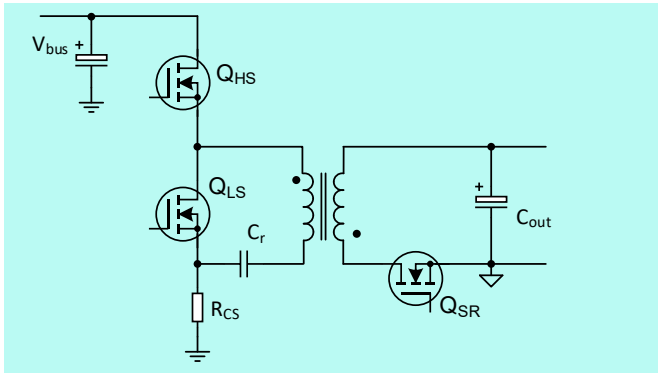

- ✓ Reduced magnetic components size
- ✓ Wide bus voltage range
- ✓ Wide output range design
- ✓ Lower cost

LLC / LCC

- ✓ ZVS and resonant operation
- - Unit gain conversion
- - Limited frequency range

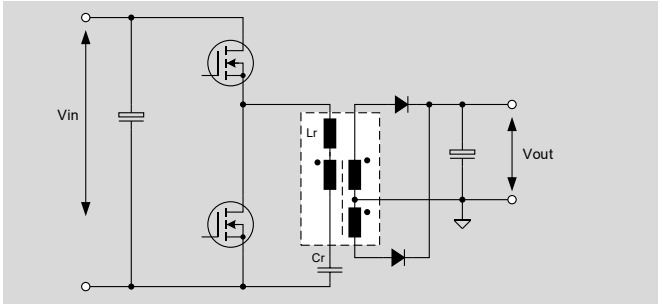

[Owner: Dr. J. Hu Doc ID: Vers.: V1.0.0]

Copyright © Infineon Technologies AG 2026. All rights reserved.

Advantages of the HFB Topology

- Simplicity
  - Half-bridge on the primary side and one rectifier path on the secondary side
  - Conventional flyback transformer without additional resonant inductor
- Highly efficient energy transfer
  - ZVS for the primary side switches and zero-current switching (ZCS) for the secondary side switch achievable over a wide range of bus and load conditions
  - Full recycle of energy stored in the leakage inductance during operation
- Minimized system BOM cost
  - Low voltage stress for all switches
  - Only one secondary side rectifier and its controller
  - Conventional flyback transformer, but smaller transformer required due to contribution of the resonant capacitor to energy transfer
  - Smaller and simpler EMI filter due to the ZVS and ZCS operation
- Most suitable topology for wide input and output designs

[Owner: Dr. J. Hu Doc ID: Vers.: V1.0.0]

Copyright © Infineon Technologies AG 2026. All rights reserved.

Limitations and Application Proposal

- HFB suitable for applications with wide output voltage range, but still some limitations
  - Single output rectifier path: higher current and thermal stress for the secondary side rectifier
  - No CCM operation: limited peak power capability
  - No constant power operation

- Special user cases and Infineon's proposal
  1. High output current
     - Primary Series
     - Secondary Parallel

  2. High ratio of peak over nominal power
     - Relaxed output voltage range
     - Bigger output capacitance
     - Certain degree of over-design in respected to the nominal power
       - Taking the maximum required output current as the nominal output current for system design

  3. LED lighting with higher current at the middle of the output voltage
     - Certain degree of over-design in respected to the nominal power
       - Define the output nominal current based on this peak current

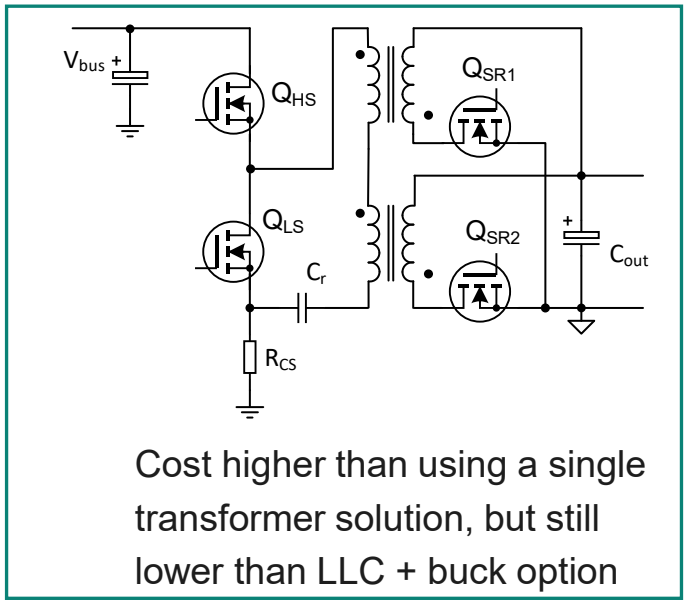

Cost higher than using a single transformer solution, but still lower than LLC + buck option

[Owner: Dr. J. Hu Doc ID: Vers.: V1.0.0]

Copyright © Infineon Technologies AG 2026. All rights reserved.

Selection Guide of DC-DC Topologies

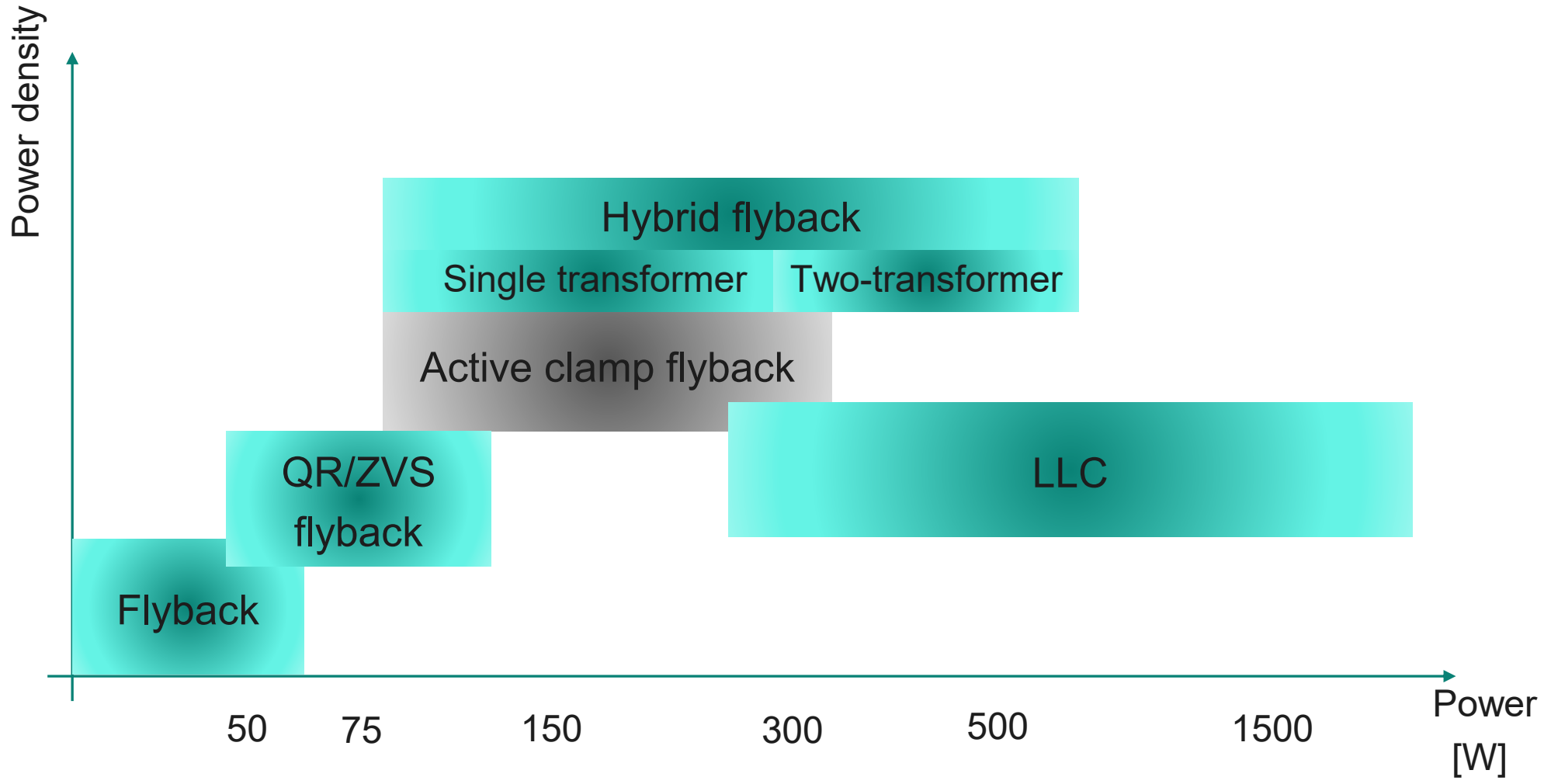

[Owner: Dr. J. Hu Doc ID: Vers.: V1.0.0]

Copyright © Infineon Technologies AG 2026. All rights reserved.


Infineon