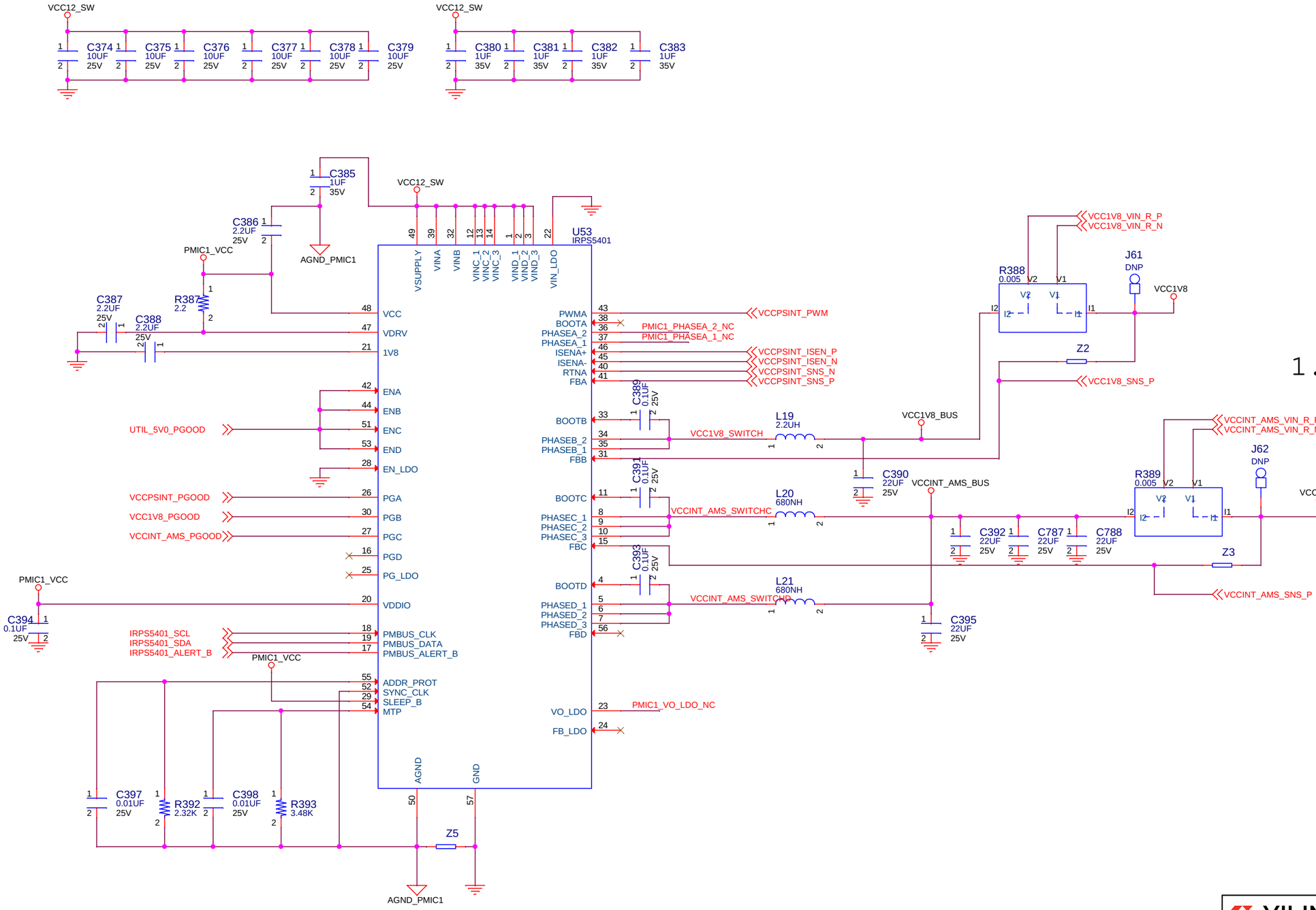

1.8V @ 2A

0.85V @ 7A

3.3V @ 0.5A

7-BIT PMBUS ADDR: 0x43

7-BIT I2C ADDR: 0x13

XILINX
2100 Logic Drive
San Jose, CA 95124

PCB P/N : 1280976
ASSY P/N : 0432076
TEST P/N : TSS0192

Title: HW-Z1-ZCU111
047 PMIC 1

Size	Date Modified:	Document Number:	Rev
B	Monday, November 27, 2017	0381811	A

Engineer: BF

Sheet 47 of 75

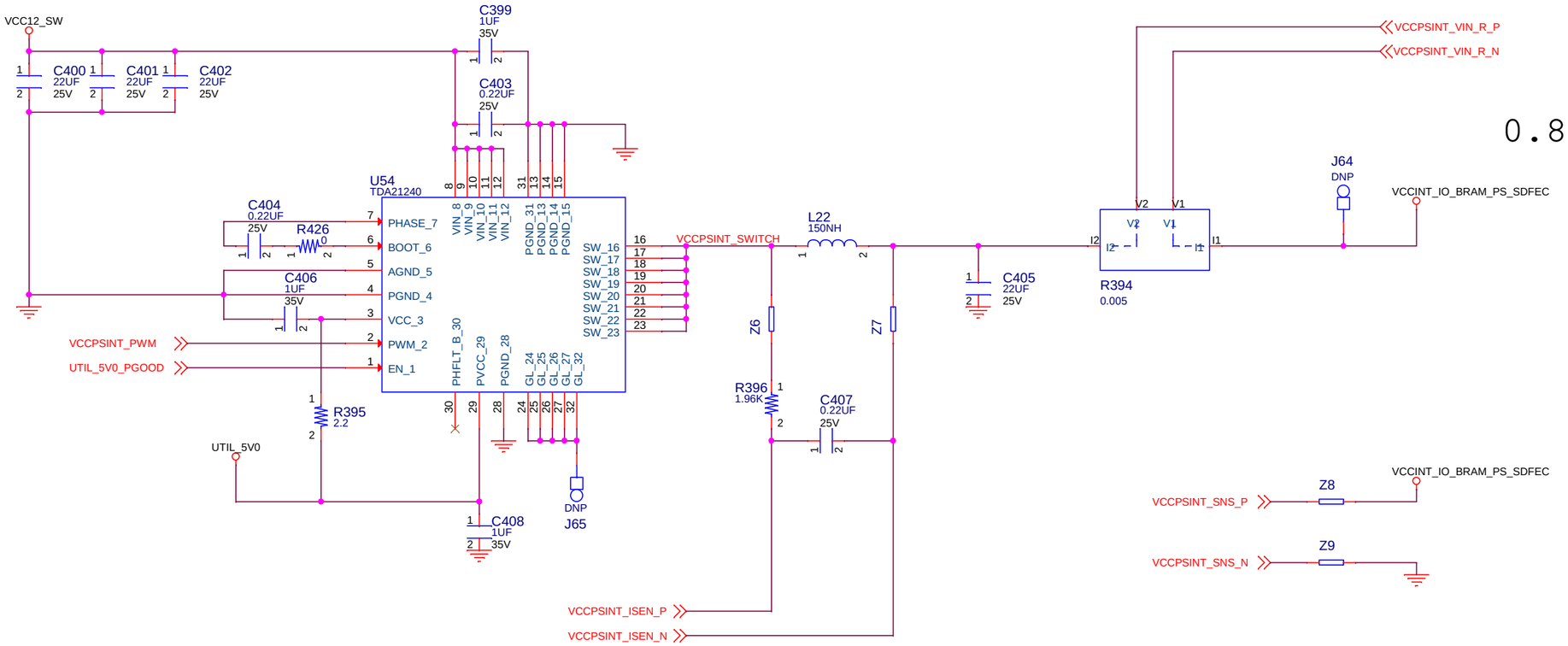

XILINX
2100 Logic Drive
San Jose, CA 95124

PCB P/N : 1280976
ASSY P/N : 0432076
TEST P/N : TSS0192

Title: HW-Z1-ZCU111
048 PMIC 1 Power Stage

Size	Date Modified:	Document Number:	Rev
B	Monday, November 27, 2017	0381811	A
	Engineer: BF	Sheet 48 of 75	

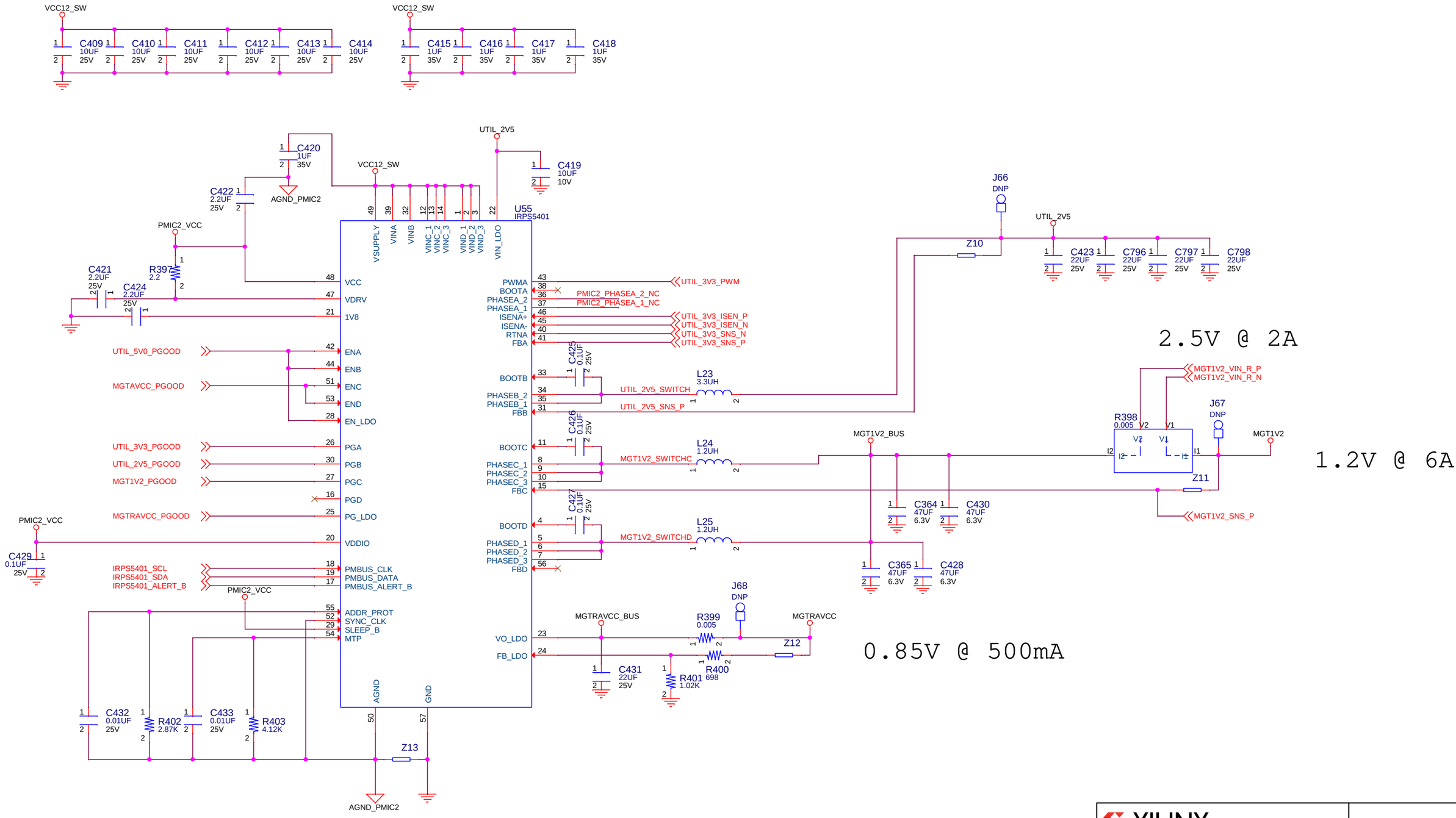

7-BIT PMBUS ADDR: 0x44

7-BIT I2C ADDR: 0x14

XILINX
2100 Logic Drive
San Jose, CA 95124

PCB P/N : 1280976
ASSY P/N : 0432076
TEST P/N : TSS0192

Title: HW-Z1-ZCU111
049 PMIC 2

Size	Date Modified:	Document Number:	Rev
B	Monday, November 27, 2017	0381811	A

Engineer: BF

Sheet 49 of 75

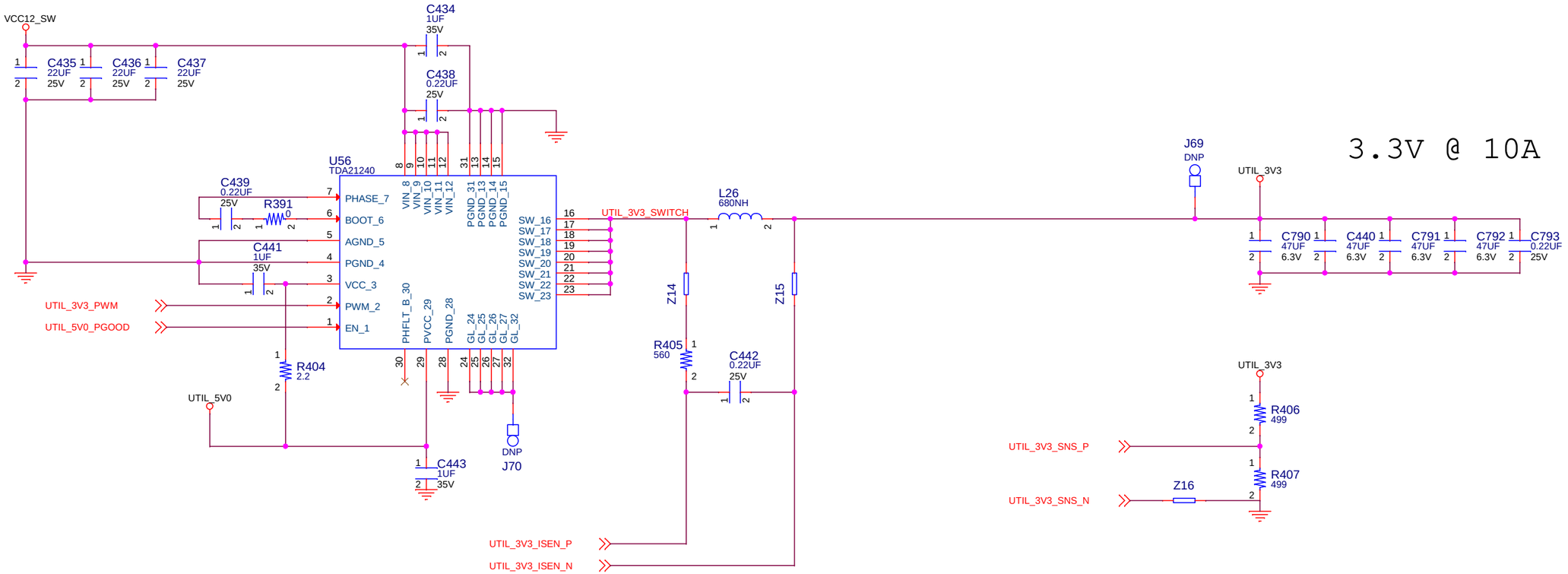

XILINX
2100 Logic Drive
San Jose, CA 95124

PCB P/N : 1280976
ASSY P/N : 0432076
TEST P/N : TSS0192

Title: HW-Z1-ZCU111
050 PMIC 2 Power Stage

Size	Date Modified:	Document Number:	Rev
B	Monday, November 27, 2017	0381811	A
	Engineer: BF	Sheet 50 of 75	

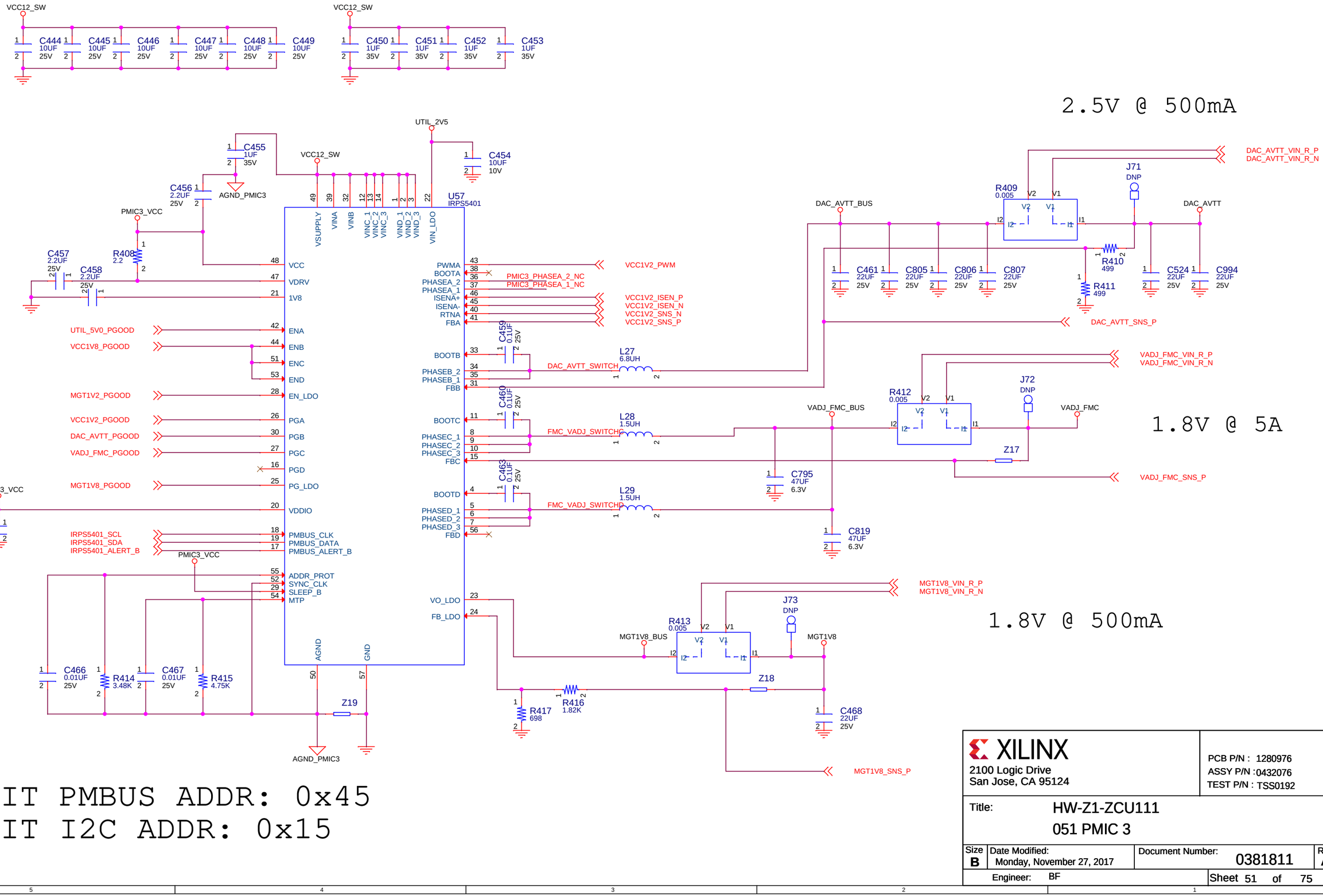

XILINX
2100 Logic Drive
San Jose, CA 95124

PCB P/N : 1280976
ASSY P/N : 0432076
TEST P/N : TSS0192

Title: HW-Z1-ZCU111
051 PMIC 3

Size	Date Modified:	Document Number:	Rev
B	Monday, November 27, 2017	0381811	A

Engineer: BF

Sheet 51 of 75

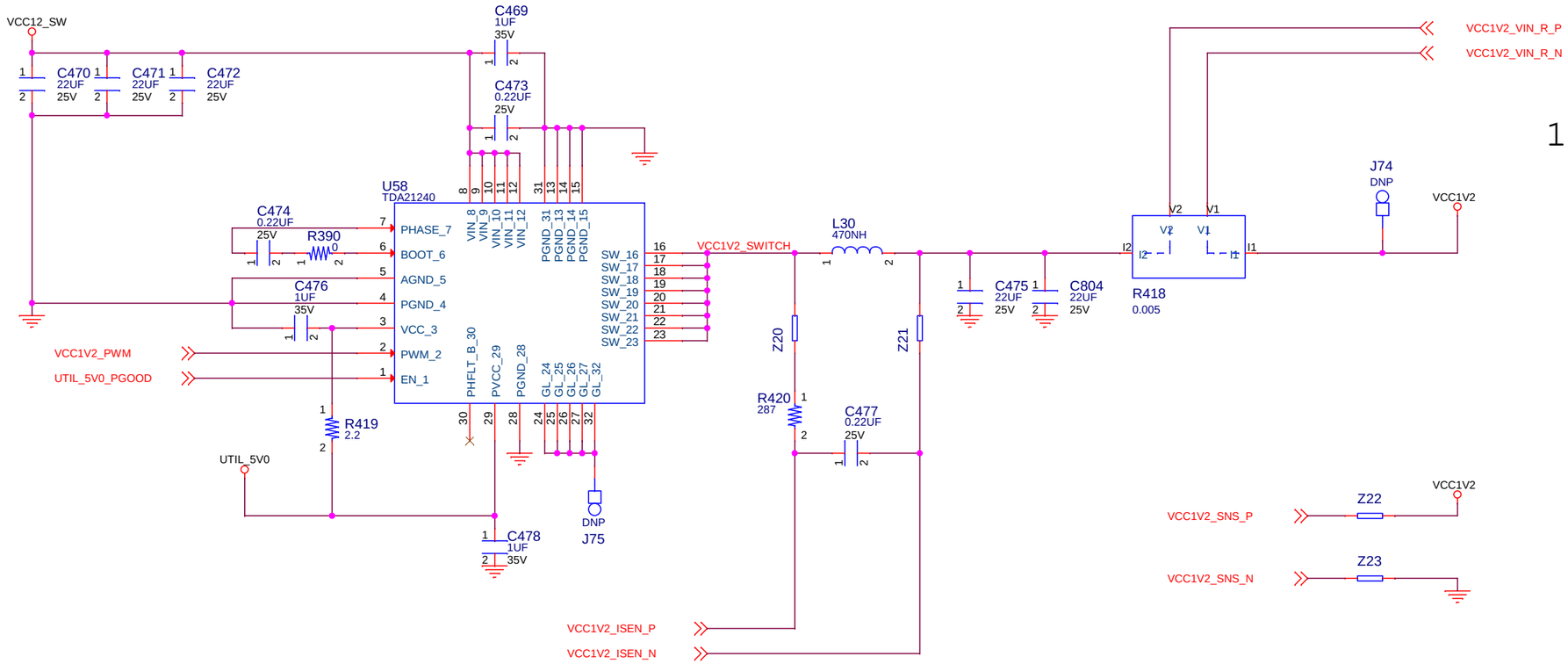

XILINX
2100 Logic Drive
San Jose, CA 95124

PCB P/N : 1280976
ASSY P/N : 0432076
TEST P/N : TSS0192

Title: HW-Z1-ZCU111
052 PMIC 3 Power Stage

Size	Date Modified:	Document Number:	Rev
B	Monday, November 27, 2017	0381811	A

Engineer: BF

Sheet 52 of 75

I2C ADDR 0x41

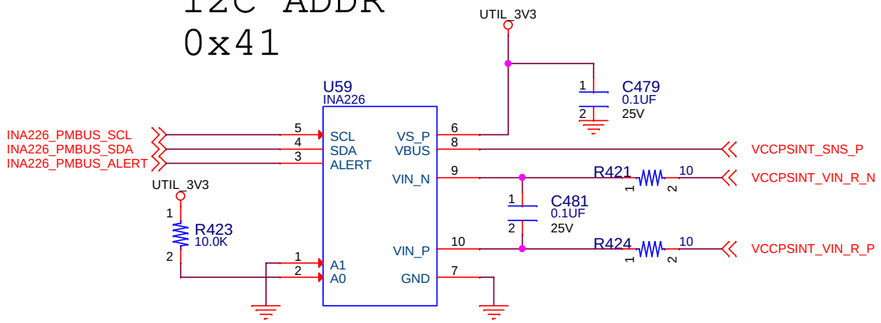

I2C ADDR 0x42

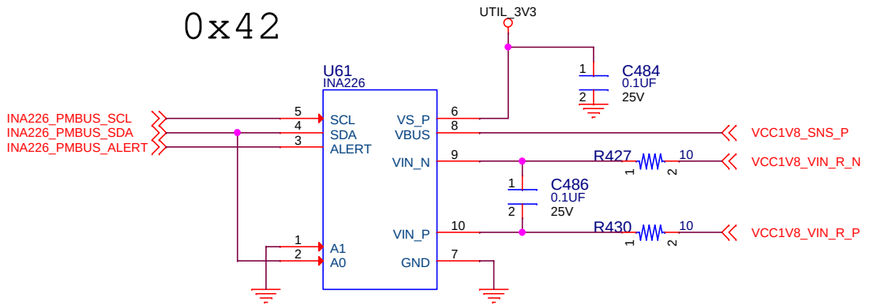

I2C ADDR 0x49

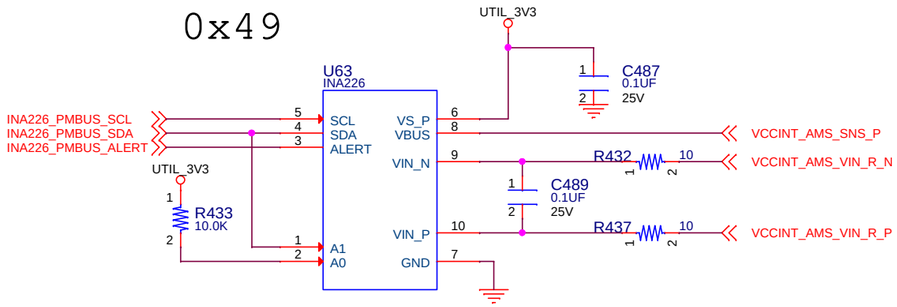

I2C ADDR 0x47

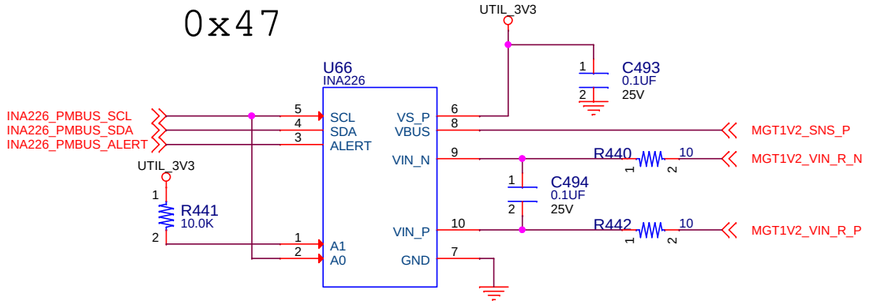

I2C ADDR 0x43

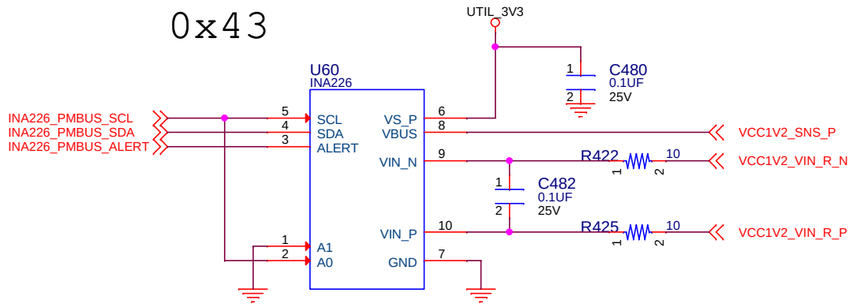

I2C ADDR 0x45

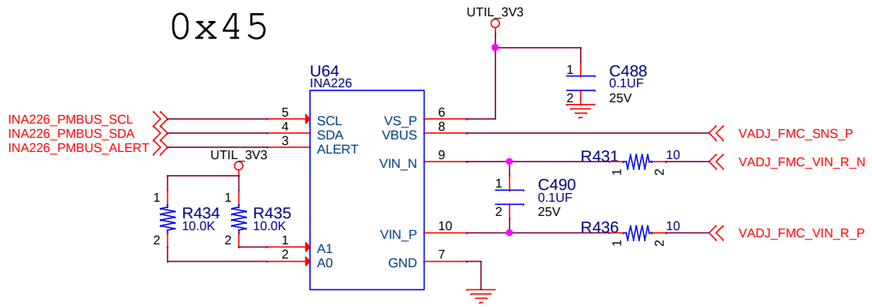

I2C ADDR 0x48

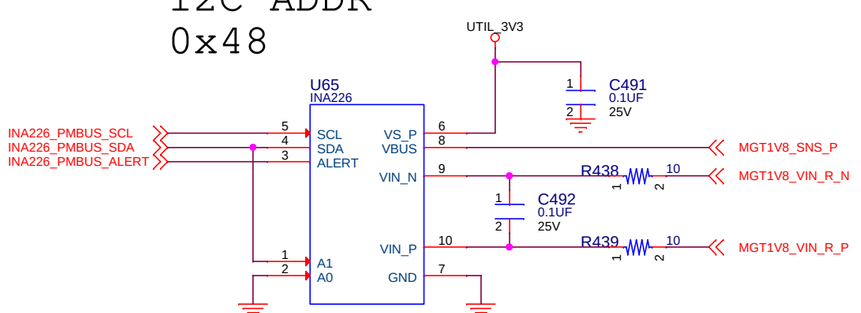

I2C ADDR 0x4A

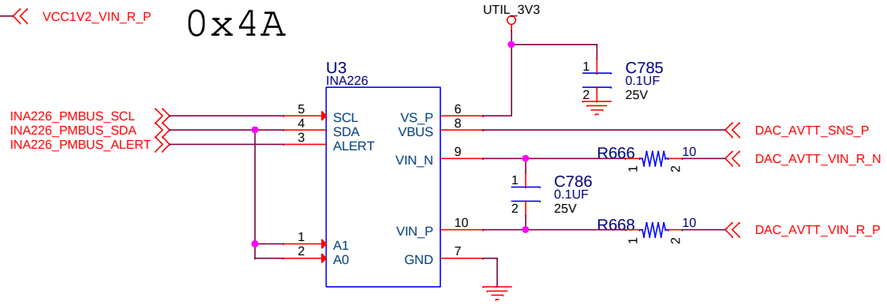

XILINX
2100 Logic Drive
San Jose, CA 95124

PCB P/N : 1280976
ASSY P/N : 0432076
TEST P/N : TSS0192

Title: HW-Z1-ZCU111
053 PMIC Current Sense

Size	Date Modified:	Document Number:	Rev
B	Monday, November 27, 2017	0381811	A
	Engineer: BF	Sheet 53 of 75	

I2C ADDR
0x40

0.85V @ 30A

U67
INA226
C495 0.1UF 25V
C496 0.1UF 25V
R443 10
R444 10
INA226_PMBUS_SCL
INA226_PMBUS_SDA
INA226_PMBUS_ALERT
UTIL_3V3

U68
IR38064
C497 10UF 10V
VCCINT_PGOOD
UTIL_5V0_PGOOD
VCC12_SW
C498 22UF 25V
C499 22UF 25V
C500 22UF 25V
C838 22UF 25V
C839 22UF 25V
C501 1UF 35V
C384 0.1UF 25V
C507 2200PF 50V
R449 130
R450 4.99K
C502 270PF 50V
R446 2.00K
C504 0.01UF 25V
R445 100K
R539 7.15K
AGND_VCCINT
VCCINT_FB
IRPS5401_SCL
IRPS5401_SDA
IRPS5401_ALERT_B
C506 2.2UF 6.3V
C503 0.1UF 25V
R557 0
L31 120NH
VCCINT_SWITCH
VCCINT_BUS
C842 47UF 6.3V
C841 47UF 6.3V
C505 47UF 6.3V
C840 47UF 6.3V
C843 47UF 6.3V
C844 47UF 6.3V
R558 4.99K
VCCINT_VSNS
VCCINT_SNS_P
VCCINT_SNS_N
R569 7.15K
AGND_VCCINT
R447 0.002
VCCINT_VIN_R_P
VCCINT_VIN_R_N
J76 DNP
VCCINT
Z24
Z25
R448 DNP
R570 499
C837 0.01UF 25V
Z26
AGND_VCCINT

XILINX 2100 Logic Drive San Jose, CA 95124			PCB P/N : 1280976 ASSY P/N : 0432076 TEST P/N : TSS0192
Title:	HW-Z1-ZCU111 054 VCCINT 30A Regulator		
Size: B	Date Modified: Monday, November 27, 2017	Document Number: 0381811	Rev: A
	Engineer: BF	Sheet 54 of 75	

I2C ADDR
0x46

0.9V @ 3A

U69
INA226
C508 0.1UF 25V
C509 0.1UF 25V
R451 10.0K
R452 10
R453 10
R456 0.002
R573 6.81K
R574 8.45K
C518 22UF 25V
C845 22UF 25V
J77 DNP
Z28
Z29

U70
IR38060
C510 10UF 10V
C511 22UF 25V
C512 22UF 25V
C513 22UF 25V
C514 1UF 35V
C854 0.1UF 25V
C516 0.1UF 25V
R571 0
L32 1.2UH
C520 2200PF 50V
R458 118
R459 6.81K
C515 100PF 50V
R455 4.99K
C517 6200PF 100V
R454 100K
R460 8.45K
C519 2.2UF 6.3V
R457 DNP
R575 1.05K
C857 0.01UF 25V
Z30

XILINX	PCB P/N : 1280976
2100 Logic Drive	ASSY P/N : 0432076
San Jose, CA 95124	TEST P/N : TSS0192
Title:	HW-Z1-ZCU111
	055 MGTAVCC 3A Regulator
Size: B	Date Modified: Monday, November 27, 2017
Document Number:	0381811
Rev: A	
Engineer: BF	Sheet 55 of 75

I2C ADDR
0x4B

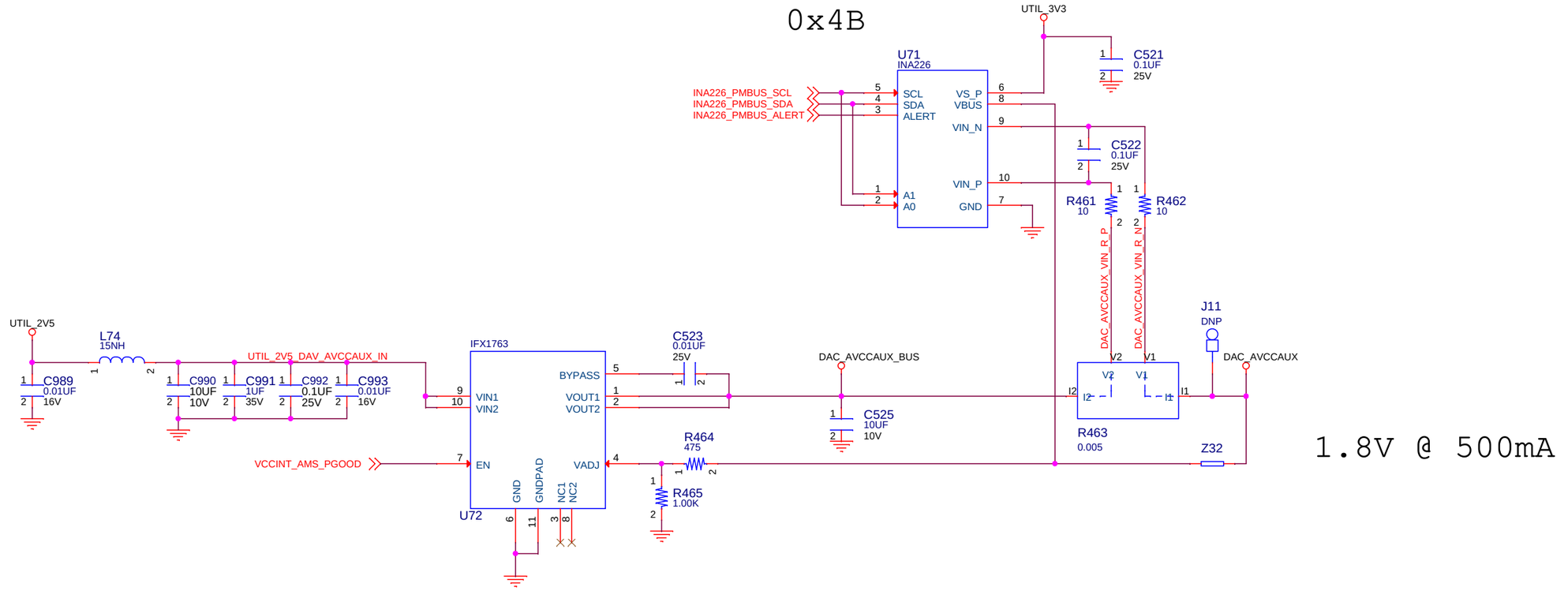

1.8V @ 500mA

XILINX
2100 Logic Drive
San Jose, CA 95124

PCB P/N : 1280976
ASSY P/N : 0432076
TEST P/N : TSS0192

Title: HW-Z1-ZCU111
056 DAC_AVCCAUX 500mA Regulator

Size	Date Modified:	Document Number:	Rev
B	Monday, November 27, 2017	0381811	A

Engineer: BF

I2C ADDR
0x4D

1.8V @ 2A

U73
INA226
C526 0.1UF 25V
C527 0.1UF 25V
R466 10.0K
R467 10
R468 10
INA226_PMBUS_SCL
INA226_PMBUS_SDA
INA226_PMBUS_ALERT
UTIL_3V3
ADC_AVCCAUX_VIN_R_P
ADC_AVCCAUX_VIN_R_N

U74
IR38060
ADC_AVCCAUX_PGOOD
VCCINT_AMS_PGOOD
C528 10UF 10V
VCC12_SW
C529 22UF 25V
C530 22UF 25V
C531 22UF 25V
C532 1UF 35V
C855 0.1UF 25V
C534 0.1UF 25V
R572 0
L33 3.3UH
ADC_AVCCAUX_BUS
ADC_AVCCAUX_SWITCH
C536 22UF 25V
C856 22UF 25V
R576 2.43K
R577 931
R471 0.005
J79 DNP
ADC_AVCCAUX
C995 22UF 25V
C996 22UF 25V
Z33
Z34
ADC_AVCCAUX_SNS_P
ADC_AVCCAUX_SNS_N
C538 4700PF 50V
R473 60.4
R474 2.43K
C533 100PF 50V
R470 4.87K
C535 4700PF 50V
R469 100K
ADC_AVCCAUX_FB
IRPS5401_SCL
IRPS5401_SDA
IRPS5401_ALERT_B
R475 931
AGND_ADC_AVCCAUX
C537 2.2UF 6.3V
R472 DNP
R578 1.54K
C858 0.01UF 25V
Z35
AGND_ADC_AVCCAUX

XILINX
2100 Logic Drive
San Jose, CA 95124

PCB P/N : 1280976
ASSY P/N : 0432076
TEST P/N : TSS0192

Title: HW-Z1-ZCU111
057 ADC_AVCCAUX 2A Regulator

Size	Date Modified:	Document Number:	Rev
B	Monday, November 27, 2017	0381811	A

Engineer: BF

Sheet 57 of 75

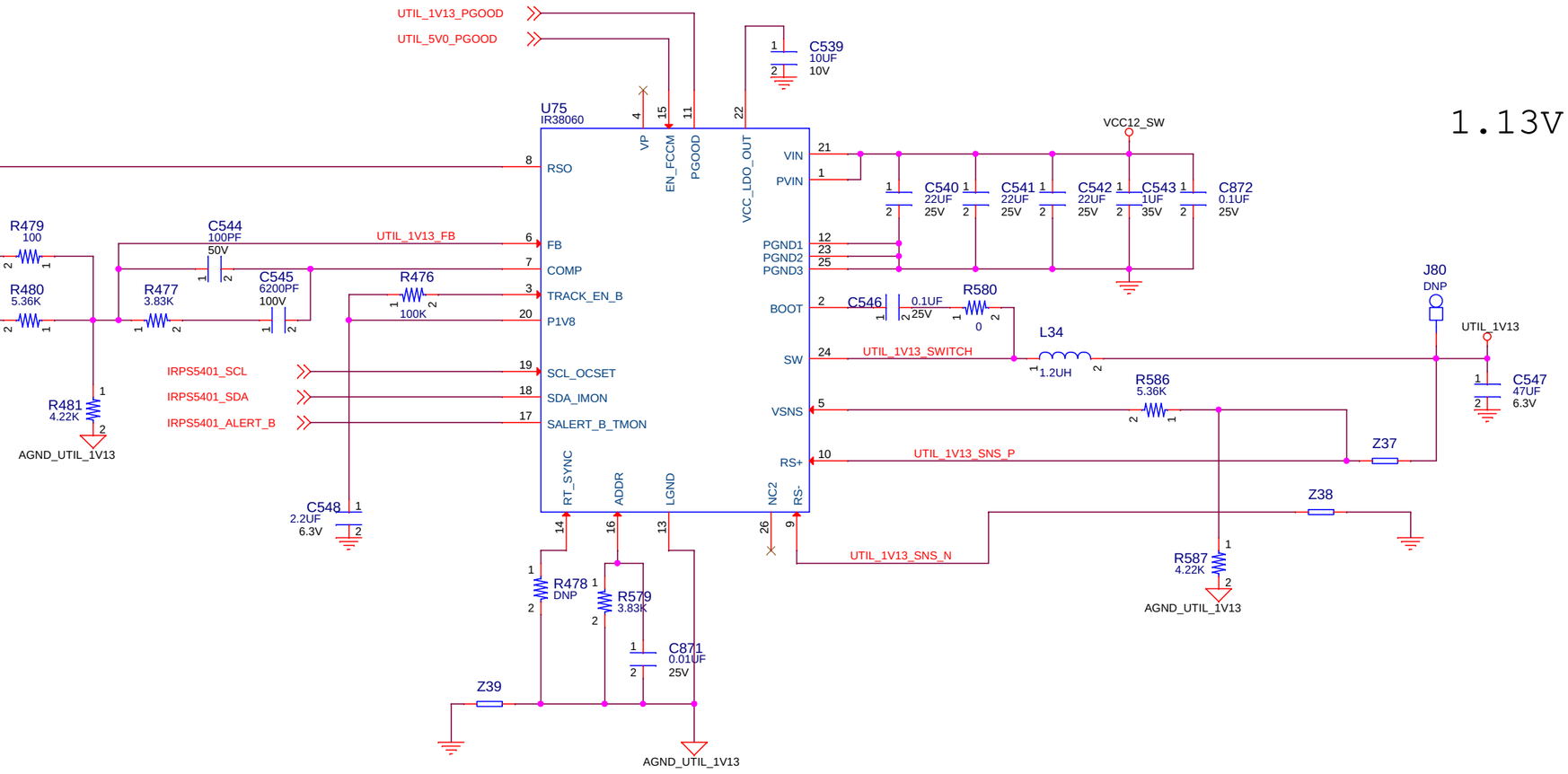

XILINX
2100 Logic Drive
San Jose, CA 95124

PCB P/N : 1280976
ASSY P/N : 0432076
TEST P/N : TSS0192

Title: HW-Z1-ZCU111
058 UTIL_1V13 4A Regulator

Size	Date Modified:	Document Number:	Rev
B	Monday, November 27, 2017	0381811	A

Engineer: BF

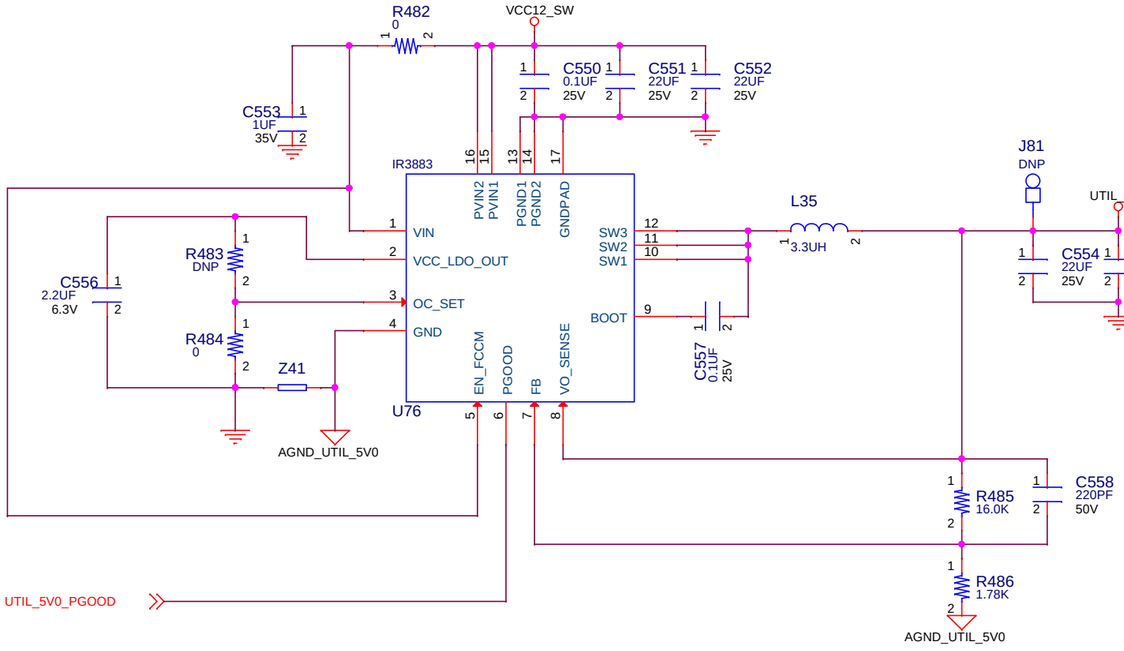

5.0V @ 2.7A

XILINX
2100 Logic Drive
San Jose, CA 95124

PCB P/N : 1280976
ASSY P/N : 0432076
TEST P/N : TSS0192

Title: HW-Z1-ZCU111
059 UTIL_5V0 2.7A Regulator

Size	Date Modified:	Document Number:	Rev
B	Monday, November 27, 2017	0381811	A

Engineer: BF

Sheet 59 of 75

I2C ADDR
0x4C

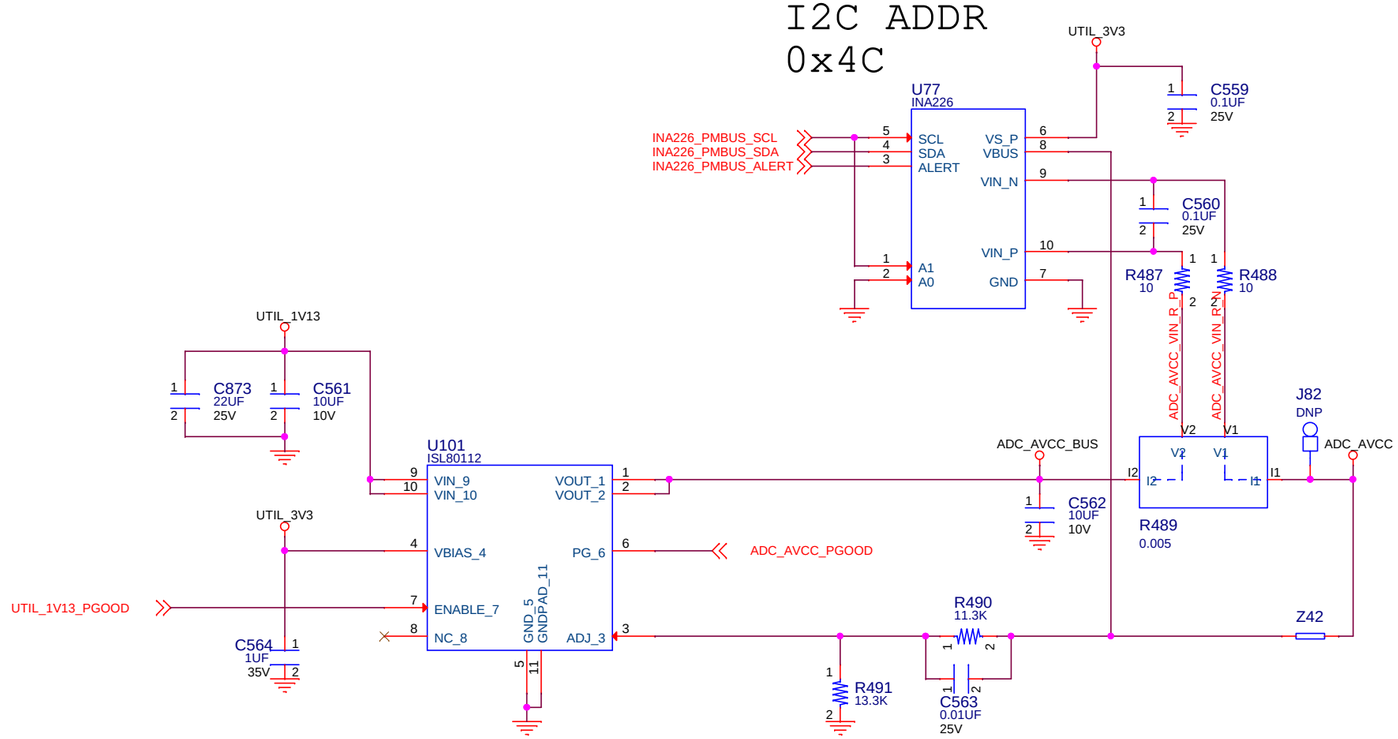

0.925V @ 2A

I2C ADDR
0x4E

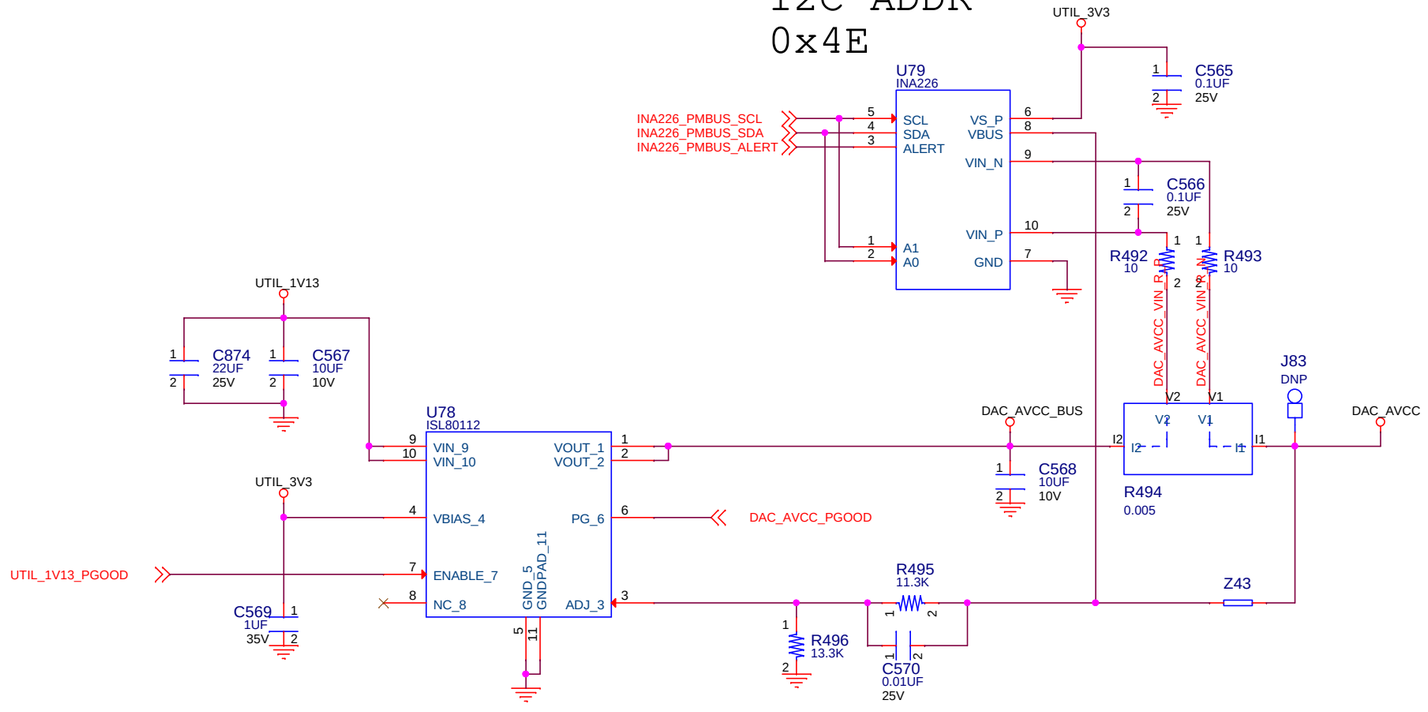

0.925V @ 1A

XILINX 2100 Logic Drive San Jose, CA 95124		PCB P/N : 1280976 ASSY P/N : 0432076 TEST P/N : TSS0192
Title:	HW-Z1-ZCU111 060 ADC_AVCC DAC_AVCC Reglators	
Size: B	Date Modified: Monday, November 27, 2017	Document Number: 0381811 Rev: A
Engineer: BF		Sheet 60 of 75

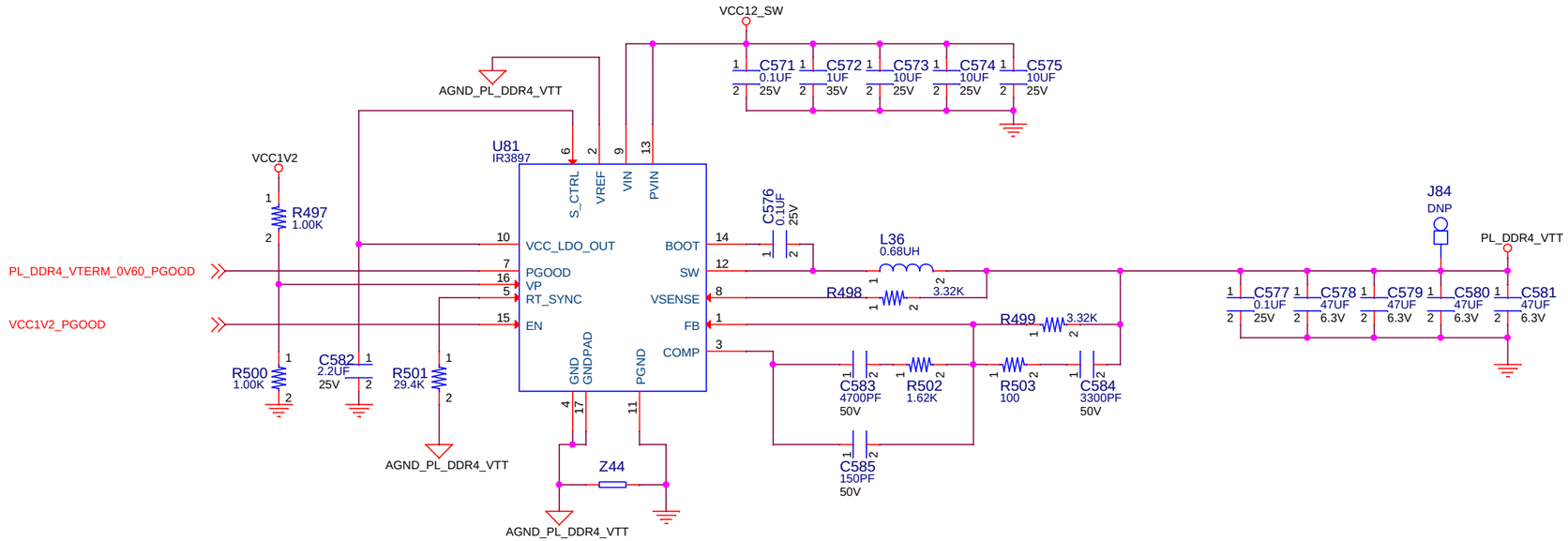

XILINX
2100 Logic Drive
San Jose, CA 95124

PCB P/N : 1280976
ASSY P/N : 0432076
TEST P/N : TSS0192

Title: HW-Z1-ZCU111
061 DDR4 Termination Regulators

Size	Date Modified:	Document Number:	Rev
B	Monday, November 27, 2017	0381811	A

Engineer: BF

Sheet 61 of 75