

Power tree for Versal™ AI Edge Series Gen 2 and Versal™ Prime Series Gen 2 SoC Mode

August 2026

Public

Power estimation for Versal™ AI Edge Series Gen 2 SoC Mode

							Current (A)		
Sequence	**Rail group**	**Combined rails**	**Nom voltage (V)**	**DC tolerance**	**AC transient margin**	**Step load (%)**	**2VE3304**	**2VE3358**	**2VE3504**
1.2	0V8_SOC (Digital)	VCC_MIPI, VCC_LPD, VCC_FPD, VCC_USB2, VCC_PAUX, VCC_USB3, VCC_SOC, VCC_IO, VCC_MMD	0.8	±1%	±2%	33	13.5 TDA38725A	24 TDA38740A	14.5 TDA38725A
1.3	1V5_SOC (Digital)	VCCAUX_SMON, VCCAUX_LPD, VCCAUX, VCCAUX_PLL	1.5	±1%	±2%	100	3 IRPS5401-1-C	3.5 IRPS5401-1-C	4 IRPS5401-1-A + TDA21535
1.4	0V92_SOC (Analog)	VGTYP_MMI_AVCC**	0.92	±1%	±2%	70	2 TDA38806	2 TDA38806	2 TDA38806
1.5	1V5_SOC (Analog)	VGTYP_MMI_AVCCAUX**	1.5	±1%	±2%	70	0.1 IRPS5401-1-LDO	0.1 IRPS5401-1-LDO	0.1 IRPS5401-1-LDO
1.6	1V2_SOC (Analog)	VGTYP_MMI_AVTT**	1.2	±1%	±2%	70	2 TDA38806	2 TDA38806	2 TDA38806
1.1	1V8_SOC (Digital)	VCCIO_MIPI, VCCO_PSIO, VCCIO_PAUX, VCCREG_USB2, VCCIO_USB3	1.8	±1%	±2%	100	1.3 IRPS5401-1-A	1.3 IRPS5401-1-A	1.3 IRPS5401-1-C
1.1	3V3_SOC (Digital)	VCCO_PSIO, VCCIO_USB2	3.3	±1%	-0.02	100	0.6 IRPS5401-1-B	0.6 IRPS5401-1-B	0.6 IRPS5401-1-B
2.2	0V8 (Digital)	VCC_RAM, VCCINT	0.8	±1%	±17 mV	33	8.5 TDA38725A	8.5 TDA38725A	15 TDA38725A
2.1	1V5 (Digital)	VCCO_HDIO	1.5	±1%	±2%	100	2 IRPS5401-1-D	2 IRPS5401-1-D	2.5 IRPS5401-1-D
2.3	0V92 (Analog)	VGTYP_AVCC**	0.92	±1%	±2%	70	2 TDA38806	2 TDA38806	2.5 TDA38806
2.4	1V5 (Analog)	VGTYP_AVCCAUX**	1.5	±1%	±2%	70	0.1 IRPS5401-2-LDO	0.1 IRPS5401-2-LDO	0.1 IRPS5401-2-LDO
2.5	1V2 (Analog)	VGTYP_AVTT**	1.2	±1%	±2%	70	2 TDA38806	2 TDA38806	2.5 TDA38806
2.1	1V8 (Digital)	VCCO_HDIO	1.8	±1%	±2%	100	2 IRPS5401-2-C	2 IRPS5401-2-C	2.5 IRPD5401-2-C
2.1	3V3 (Digital)	VCCO_HDIO	3.3	±1%	-0.02	100	2 IRPS5401-2-D	2 IRPS5401-2-D	2.5 IRPD5401-2-D
3.1	0V8_AIE (Digital)	VCC_AIE*	0.8	±1%	±17 mV	33	10 TDA38725A	10 TDA38725A	28 TDA38740A
Number of ICs used							**9**	**9**	**10**

Copyright © Infineon Technologies AG 2026. All rights reserved.

Power estimation for Versal™ AI Edge Series Gen 2 SoC Mode

							Current (A)		
Sequence	**Rail group**	**Combined rails**	**Nom voltage (V)**	**DC tolerance**	**AC transient margin**	**Step load (%)**	**2VE3558**	**2VE3804**	**2VE3858**
1.2	0V8_SOC (Digital)	VCC_MIPI, VCC_LPD, VCC_FPD, VCC_USB2, VCC_PAUX, VCC_USB3, VCC_SOC, VCC_IO, VCC_MMD	0.8	±1%	±2%	33	25 TDA38740A	19.5 TDA38740A	30 TDA38740A
1.3	1V5_SOC (Digital)	VCCAUX_SMON, VCCAUX_LPD, VCCAUX, VCCAUX_PLL	1.5	±1%	±2%	100	5 IRPS5401-1-A + TDA21535	5.5 IRPS5401-1-A + TDA21535	6 IRPS5401-1-A + TDA21535
1.4	0V92_SOC (Analog)	VGTYP_MMI_AVCC**	0.92	±1%	±2%	70	2 TDA38806	2 TDA38806	2 TDA38806
1.5	1V5_SOC (Analog)	VGTYP_MMI_AVCCAUX**	1.5	±1%	±2%	70	0.1 IRPS5401-1-LDO	0.1 IRPS5401-1-LDO	0.1 IRPS5401-1-LDO
1.6	1V2_SOC (Analog)	VGTYP_MMI_AVTT**	1.2	±1%	±2%	70	2 TDA38806	2 TDA38806	2 TDA38806
1.1	1V8_SOC (Digital)	VCCIO_MIPI, VCCO_PSIO, VCCIO_PAUX, VCCREG_USB2, VCCIO_USB3	1.8	±1%	±2%	100	1.3 IRPS5401-1-C	1.3 IRPS5401-1-C	1.3 IRPS5401-1-C
1.1	3V3_SOC (Digital)	VCCO_PSIO, VCCIO_USB2	3.3	±1%	-0.02	100	0.6 IRPS5401-1-B	0.6 IRPS5401-1-B	0.6 IRPS5401-1-B
2.2	0V8 (Digital)	VCC_RAM, VCCINT	0.8	±1%	±17 mV	33	15 TDA38725A	37 XDPE19283-L1 + TDA21590	37 XDPE19283-L1 + TDA21590
2.1	1V5 (Digital)	VCCO_HDIO	1.5	±1%	±2%	100	2.5 IRPS5401-1-D	3 IRPS5401-1-D	3 IRPS5401-1-D
2.3	0V92 (Analog)	VGTYP_AVCC**	0.92	±1%	±2%	70	2.5 TDA38806	3 TDA38806	3 TDA38806
2.4	1V5 (Analog)	VGTYP_AVCCAUX**	1.5	±1%	±2%	70	0.1 IRPS5401-2-LDO	0.1 IRPS5401-2-LDO	0.1 IRPS5401-2-LDO
2.5	1V2 (Analog)	VGTYP_AVTT**	1.2	±1%	±2%	70	2.5 TDA38806	3 TDA38806	3 TDA38806
2.1	1V8 (Digital)	VCCO_HDIO	1.8	±1%	±2%	100	2.5 IRPD5401-2-C	3 IRPD5401-2-C	3 IRPD5401-2-C
2.1	3V3 (Digital)	VCCO_HDIO	3.3	±1%	-0.02	100	2.5 IRPD5401-2-D	3 IRPD5401-2-D	3 IRPD5401-2-D
3.1	0V8_AIE (Digital)	VCC_AIE*	0.8	±1%	±17 mV	33	28 TDA38740A	43 XDPE19283-L2 + 2xTDA21590	43 XDPE19283-L2 + 2xTDA21590
Number of ICs used							**10**	**12**	**12**

Copyright © Infineon Technologies AG 2026. All rights reserved.

Versal™ AI Edge Series Gen 2 SoC Mode for 2VE3304

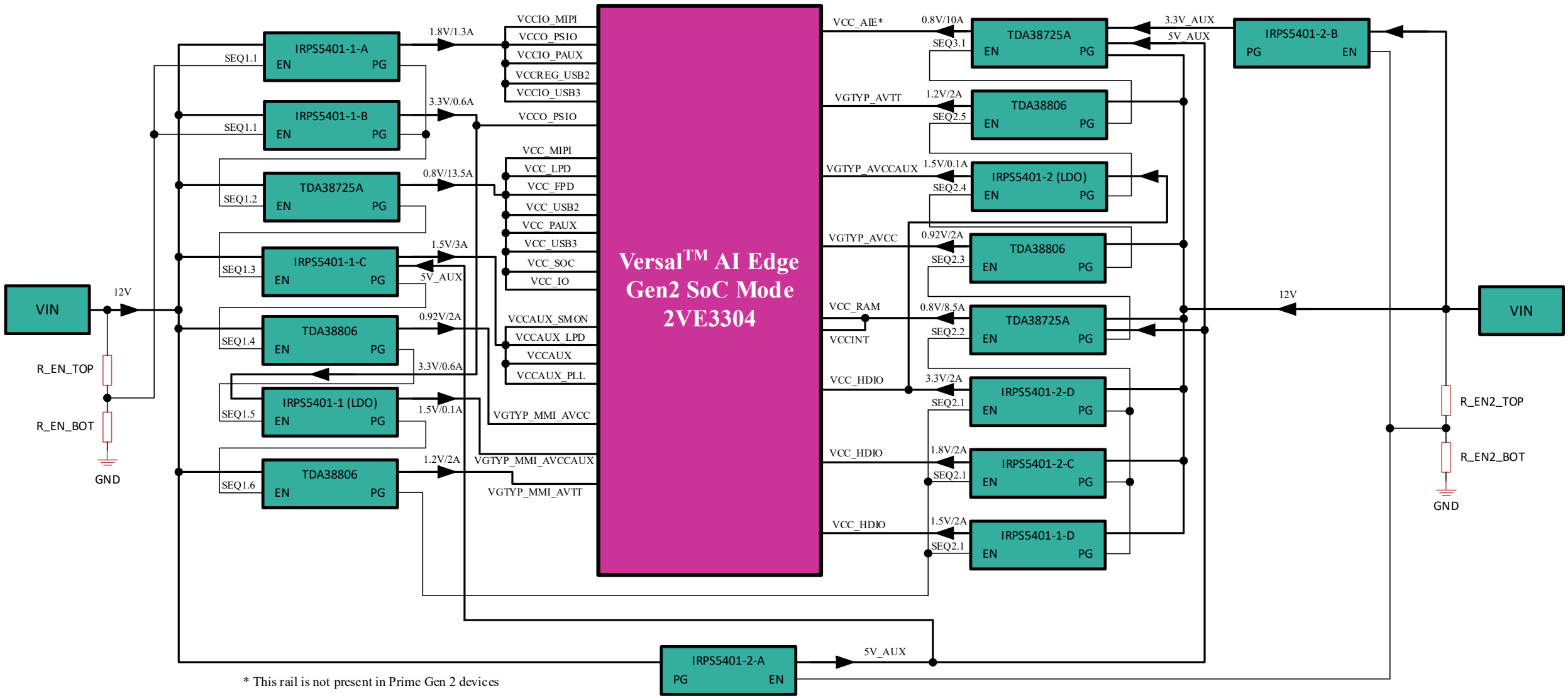

Copyright © Infineon Technologies AG 2026. All rights reserved.

Versal™ AI Edge Series Gen 2 SoC Mode for 2VE3358

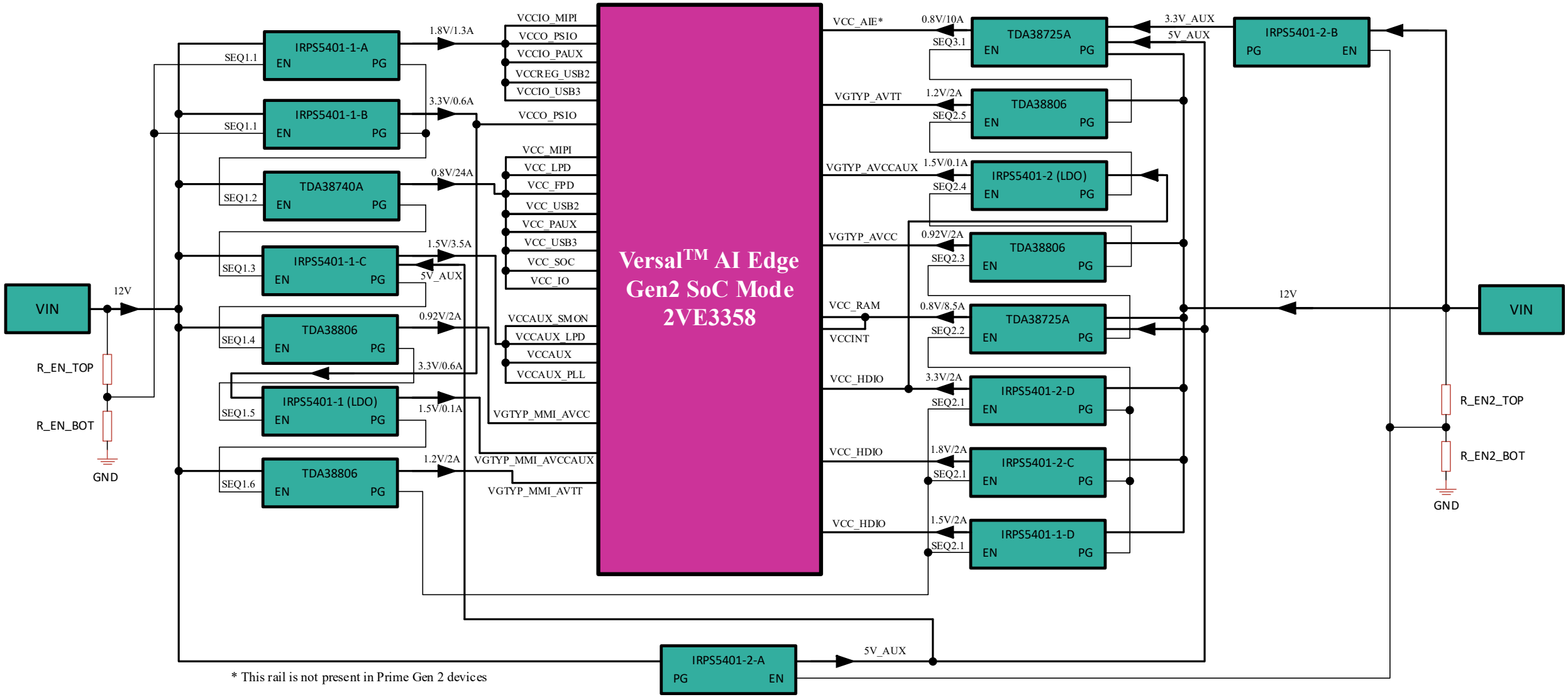

Copyright © Infineon Technologies AG 2026. All rights reserved.

Versal™ AI Edge Series Gen 2 SoC Mode for 2VE3504

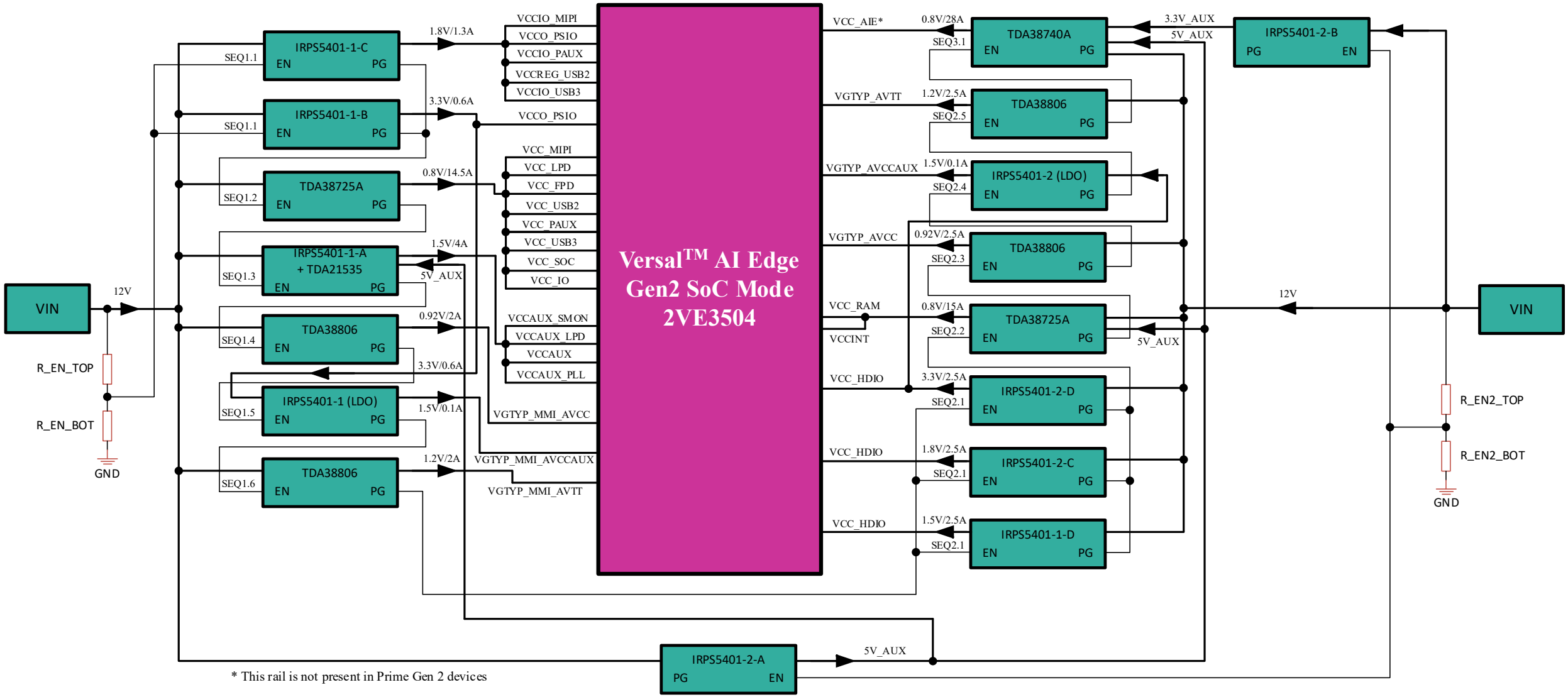

Copyright © Infineon Technologies AG 2026. All rights reserved.

Versal™ AI Edge Series Gen 2 SoC Mode for 2VE3558

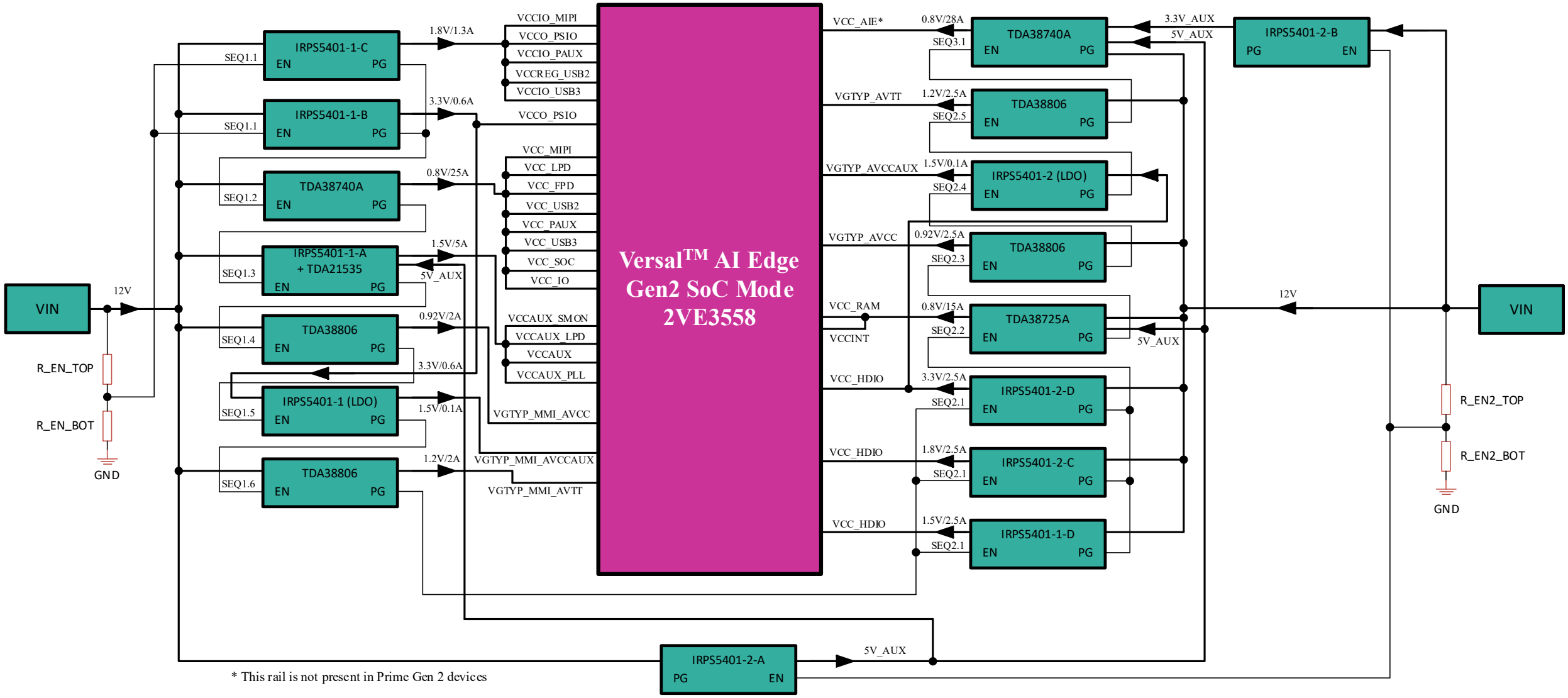

Copyright © Infineon Technologies AG 2026. All rights reserved.

Versal™ AI Edge Series Gen 2 SoC Mode for 2VE3804

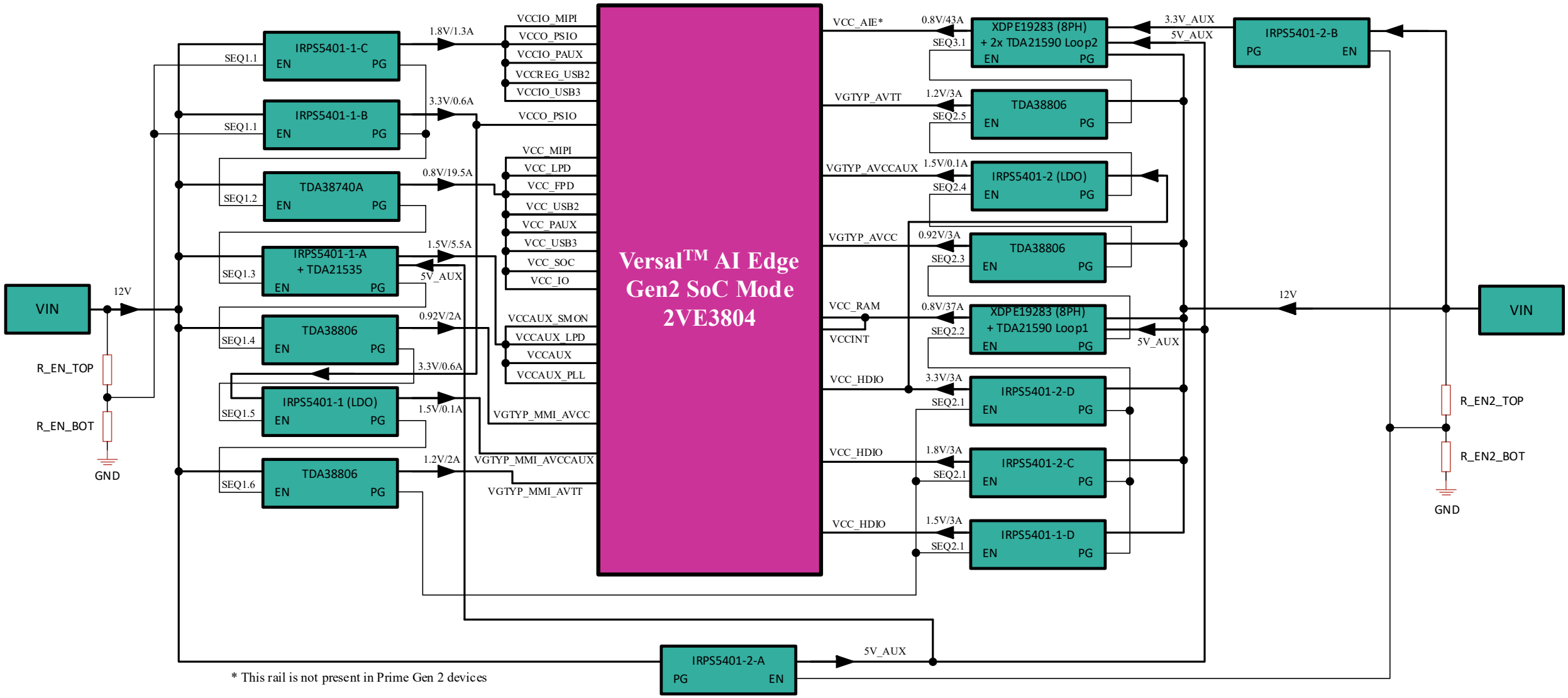

Copyright © Infineon Technologies AG 2026. All rights reserved.

Versal™ AI Edge Series Gen 2 SoC Mode for 2VE3858

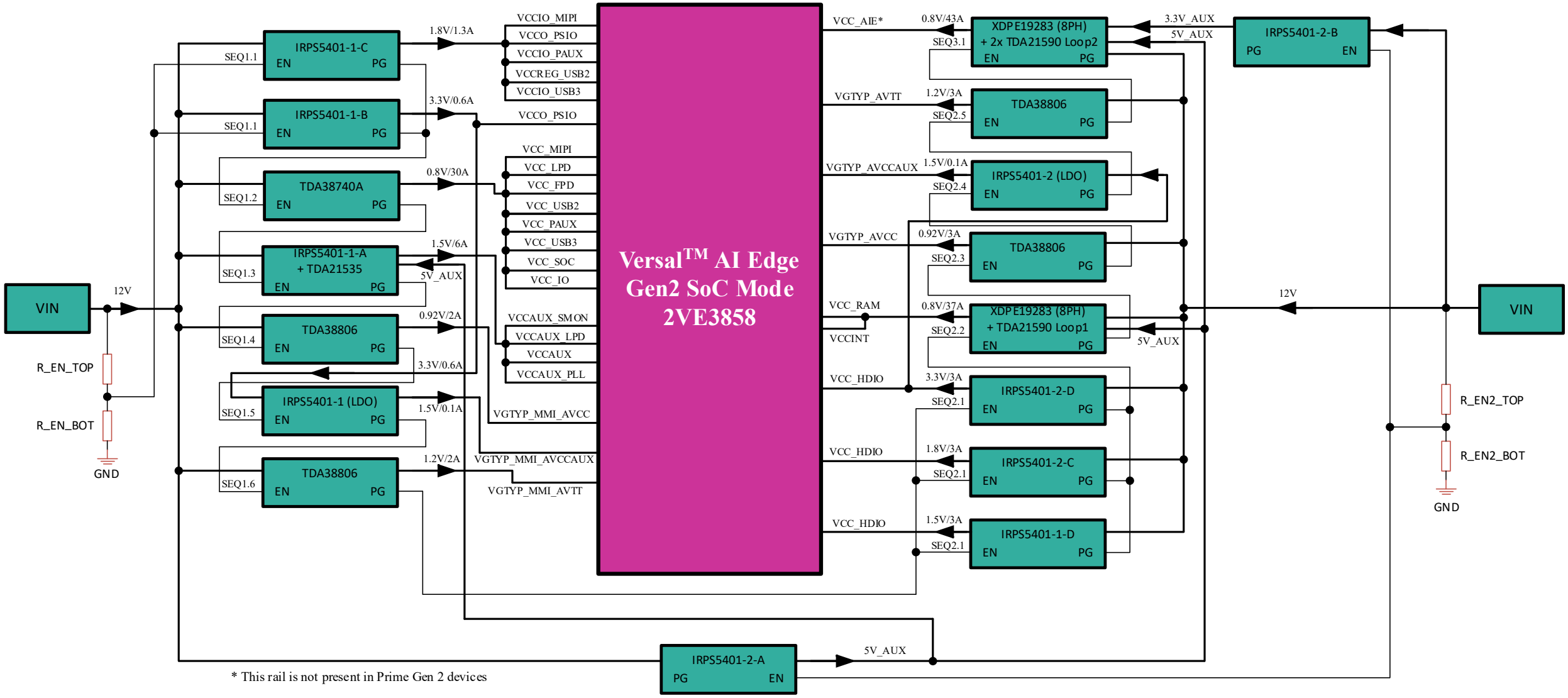

Copyright © Infineon Technologies AG 2026. All rights reserved.

Power estimation for Versal™ Prime Series Gen 2 SoC Mode

							Current (A)			
Sequence	Rail group	Combined rails	Nom voltage (V)	DC tolerance	AC transient margin	Step load (%)	2VM3358	2VM3558	2VM3654	2VM3858
1.2	0V8_SOC (Digital)	VCC_MIPI, VCC_LPD, VCC_FPD, VCC_USB2, VCC_PAUX, VCC_USB3, VCC_SOC, VCC_IO, VCC_MMD	0.8	±1%	±2%	33	12 TDA38725A	17 TDA38725A	21 TDA38740A	23 TDA38740A
1.3	1V5_SOC (Digital)	VCCAUX_SMON, VCCAUX_LPD, VCCAUX, VCCAUX_PLL	1.5	±1%	±2%	100	3.5 IRPS5401-1-C	5 TDA38725A	6 TDA38825A	6 TDA38725A
1.4	0V92_SOC (Analog)	VGTYP_MMI_AVCC**	0.92	±1%	±2%	70	2 TDA38806	2 TDA38806	2 TDA38806	2 TDA38806
1.5	1V5_SOC (Analog)	VGTYP_MMI_AVCCAUX**	1.5	±1%	±2%	70	0.1 IRPS5401-1-LDO	0.1 IRPS5401-1-LDO	0.1 IRPS5401-1-LDO	0.1 IRPS5401-1-LDO
1.6	1V2_SOC (Analog)	VGTYP_MMI_AVTT**	1.2	±1%	±2%	70	2 TDA38806	2 TDA38806	2 TDA38806	2 TDA38806
1.1	1V8_SOC (Digital)	VCCIO_MIPI, VCCO_PSIO, VCCIO_PAUX, VCCREG_USB2, VCCIO_USB3	1.8	±1%	±2%	100	1.3 IRPS5401-1-A	1.3 IRPS5401-1-C	1.3 IRPS5401-1-C	1.3 IRPS5401-1-C
1.1	3V3_SOC (Digital)	VCCO_PSIO, VCCIO_USB2	3.3	±1%	-0.02	100	0.6 IRPS5401-1-B	0.6 IRPS5401-1-B	0.6 IRPS5401-1-B	0.6 IRPS5401-1-B
2.2	0V8 (Digital)	VCC_RAM, VCCINT	0.8	±1%	±17 mV	33	8.5 TDA38725A	15 IRPS5401-1-A + TDA21535	20 IRPS5401-1-A + TDA21535	37 IRPS5401-1-A + TDA21590
2.1	1V5 (Digital)	VCCO_HDIO	1.5	±1%	±2%	100	2 IRPS5401-1-D	2.5 IRPS5401-1-D	3 IRPS5401-1-D	3 IRPS5401-1-D
2.3	0V92 (Analog)	VGTYP_AVCC**	0.92	±1%	±2%	70	2 TDA38806	2.5 TDA38806	3 TDA38806	3 TDA38806
2.4	1V5 (Analog)	VGTYP_AVCCAUX**	1.5	±1%	±2%	70	0.1 IRPS5401-2-LDO	0.1 IRPS5401-2-LDO	0.1 IRPS5401-2-LDO	0.1 IRPS5401-2-LDO
2.5	1V2 (Analog)	VGTYP_AVTT**	1.2	±1%	±2%	70	2 TDA38806	2.5 TDA38806	3 TDA38806	3 TDA38806
2.1	1V8 (Digital)	VCCO_HDIO	1.8	±1%	±2%	100	2 IRPS5401-2-C	2.5 IRPS5401-2-C	3 IRPS5401-2-C	3 IRPS5401-2-C
2.1	3V3 (Digital)	VCCO_HDIO	3.3	±1%	-0.02	100	2 IRPS5401-2-D	2.5 IRPS5401-2-D	3 IRPS5401-2-D	3 IRPS5401-2-D
Number of ICs used							**8**	**9**	**9**	**9**

Copyright © Infineon Technologies AG 2026. All rights reserved.

Versal™ Prime Series Gen 2 SoC Mode for 2VM3358

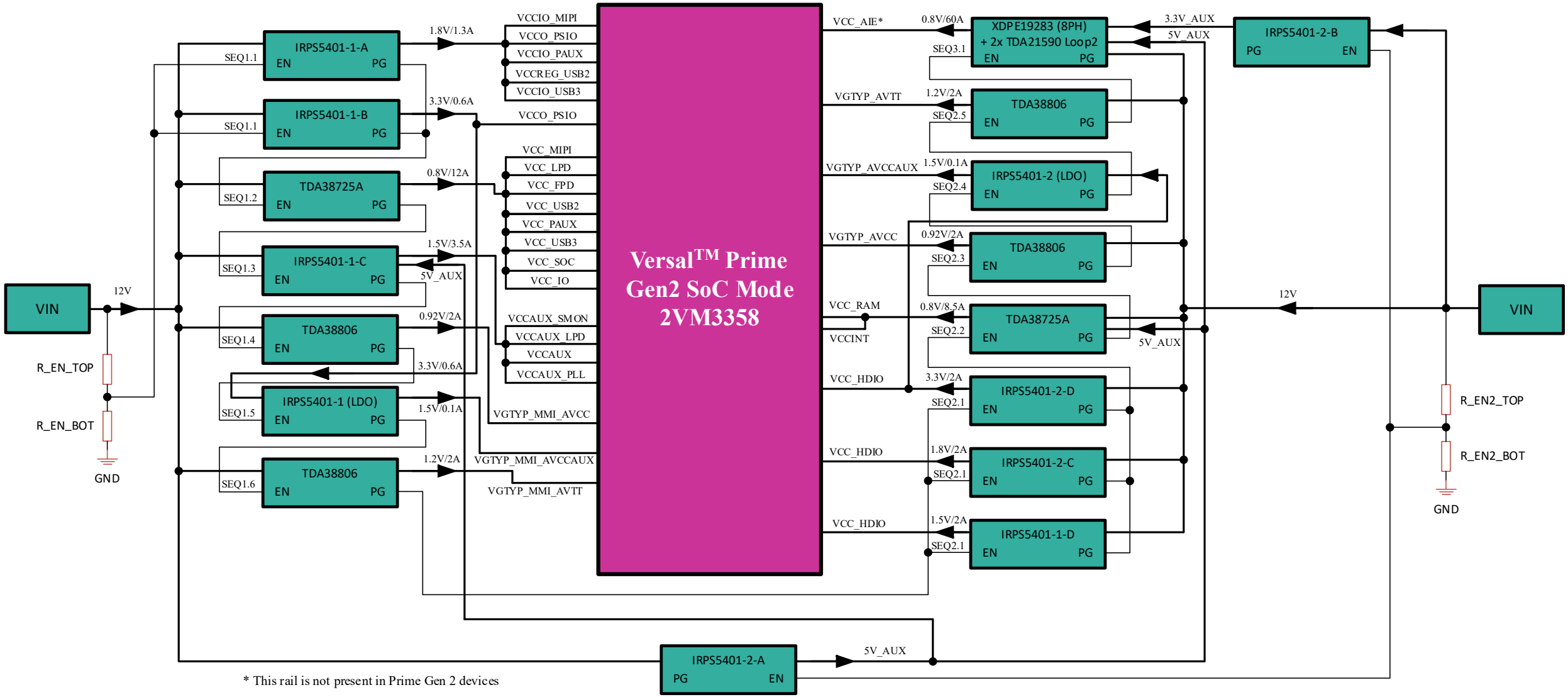

Copyright © Infineon Technologies AG 2026. All rights reserved.

Versal™ Prime Series Gen 2 SoC Mode for 2VM3558

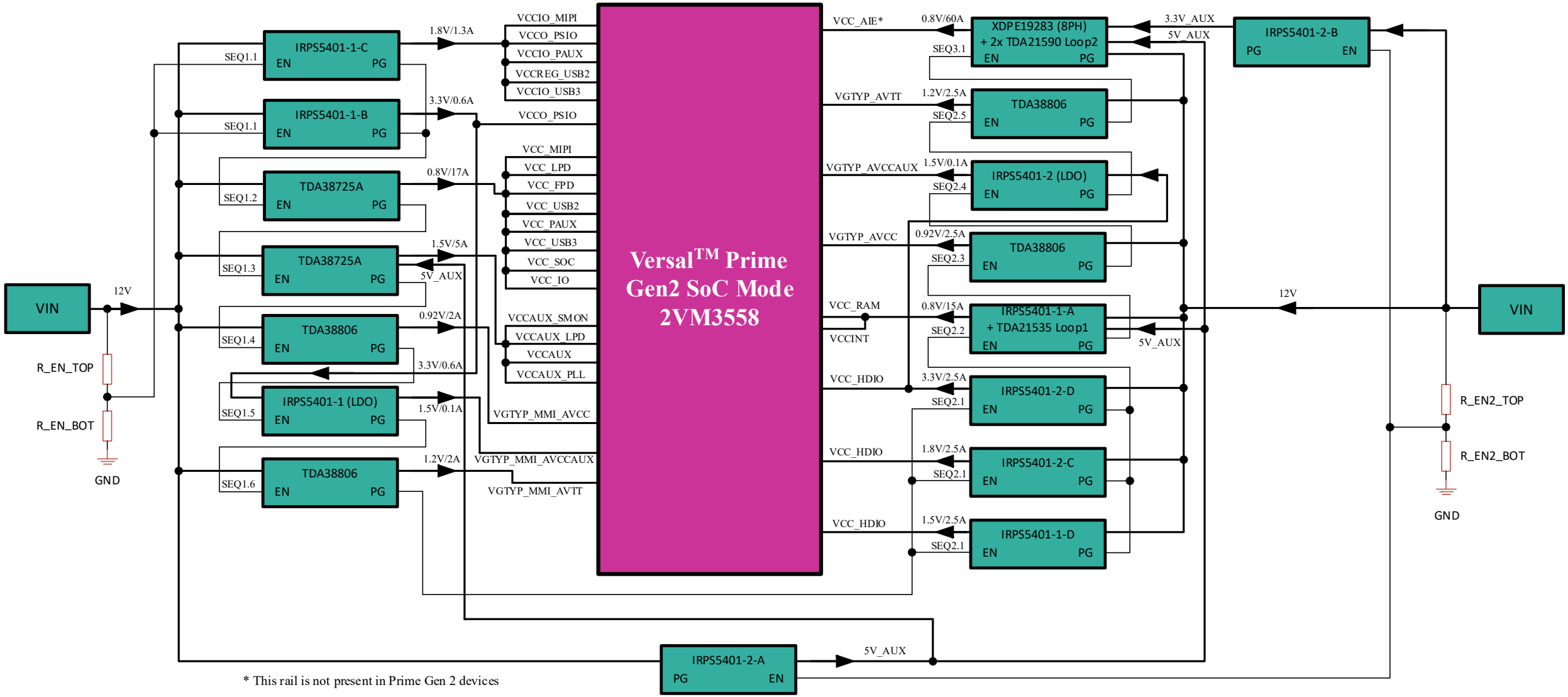

Copyright © Infineon Technologies AG 2026. All rights reserved.

Versal™ Prime Series Gen 2 SoC Mode for 2VM3654

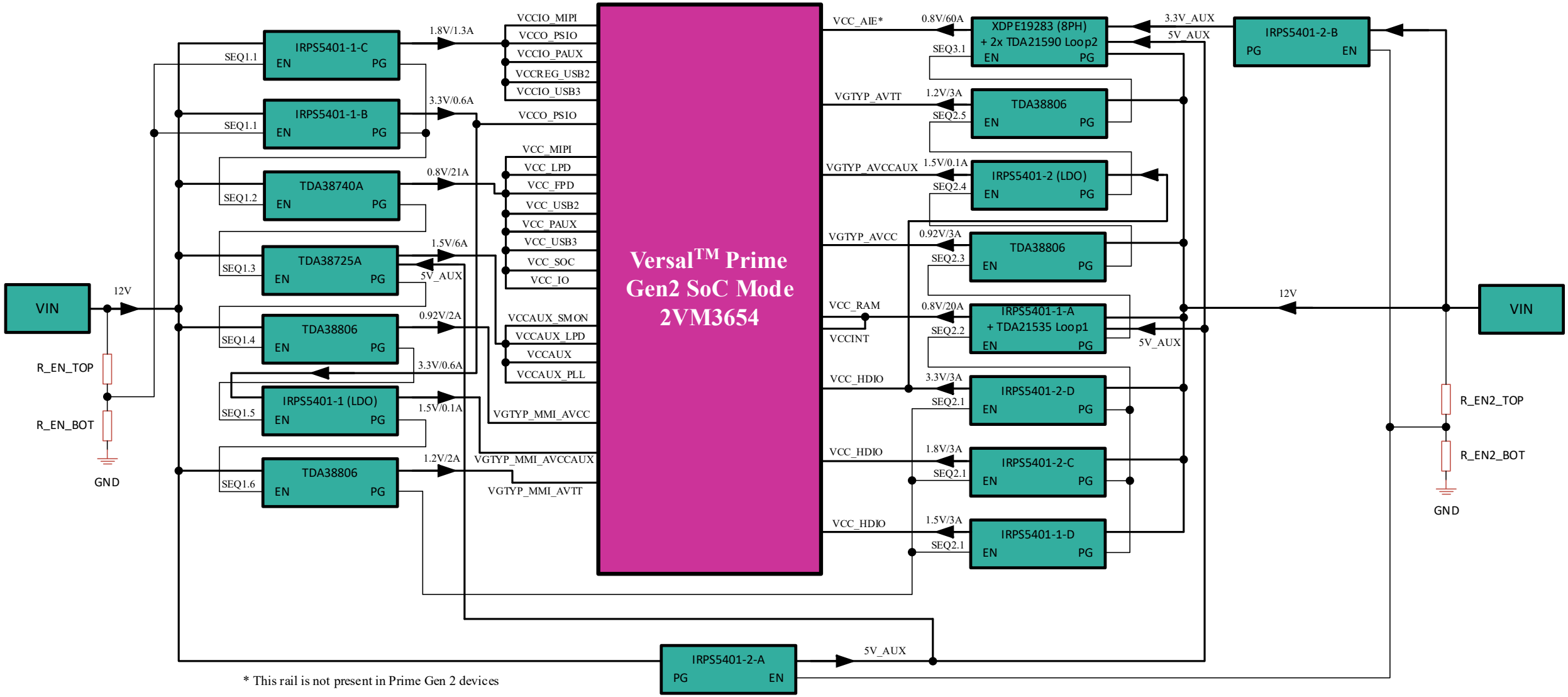

Copyright © Infineon Technologies AG 2026. All rights reserved.

Versal™ Prime Series Gen 2 SoC Mode for 2VM3858

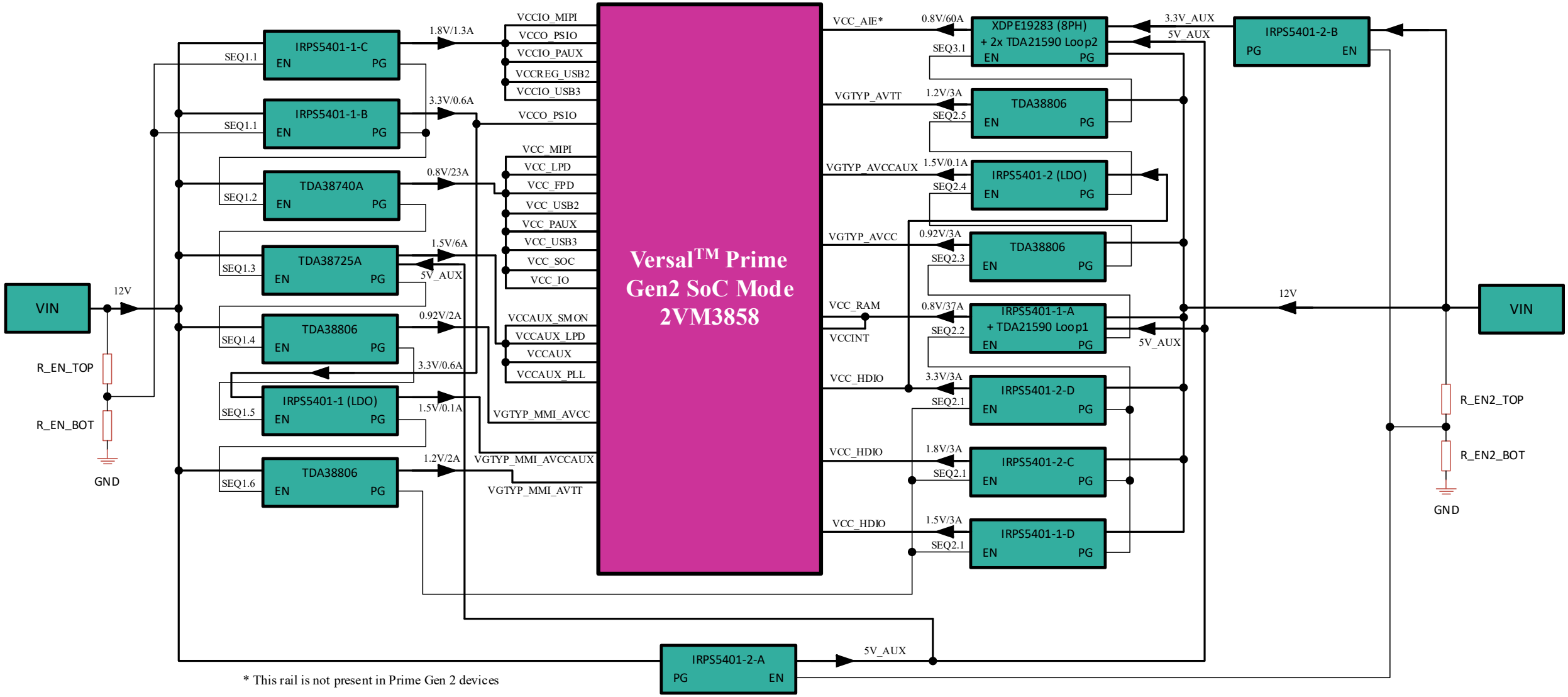

Copyright © Infineon Technologies AG 2026. All rights reserved.


Infineon