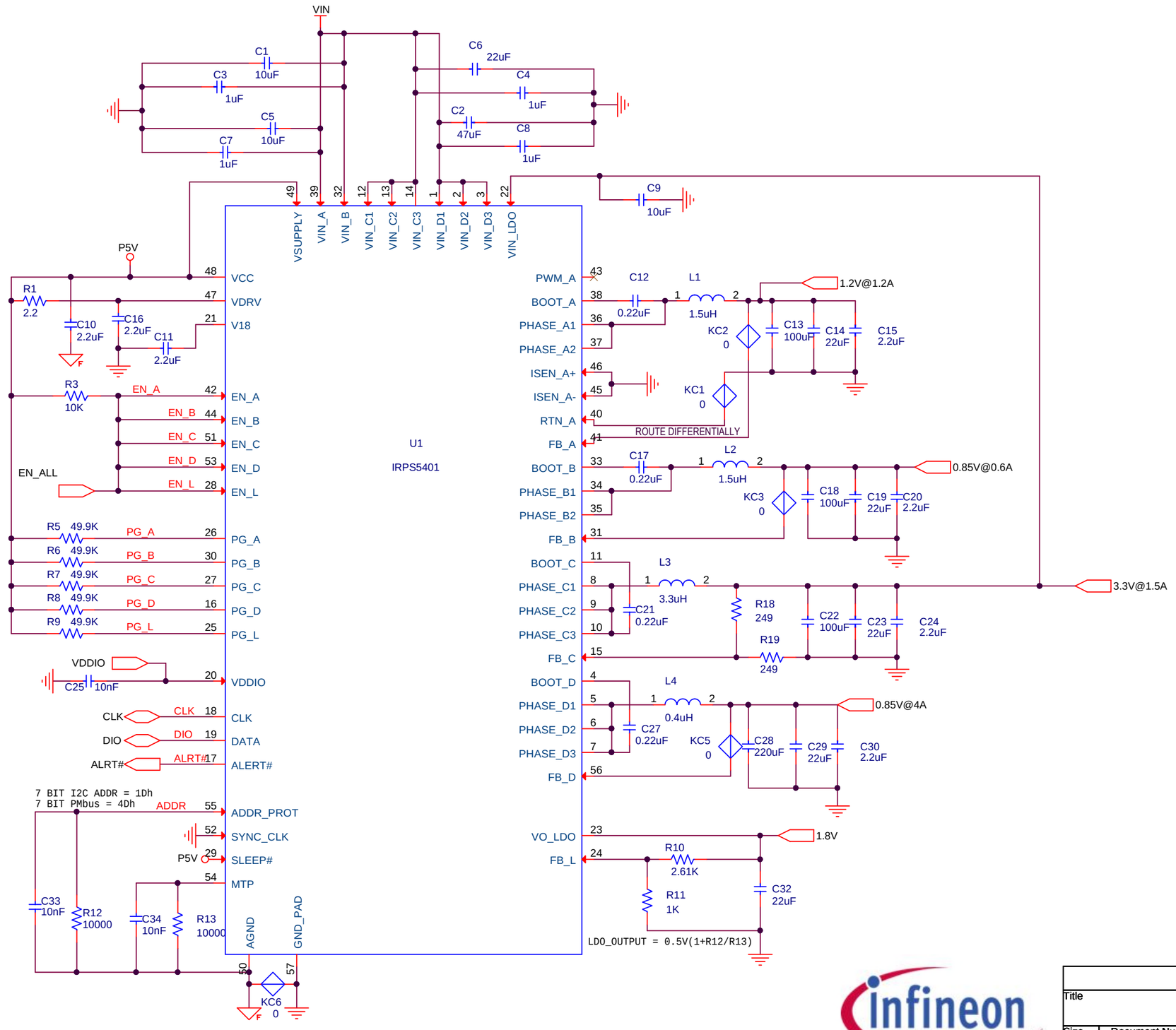

MACRO

IRPS5401 MACRO		
Title: ZYNQ 10000 CONFIG 2		
Size: B	Document Number: EV113-002	Rev: -
Date: Thursday, July 27, 2017	Sheet 1 of 1	