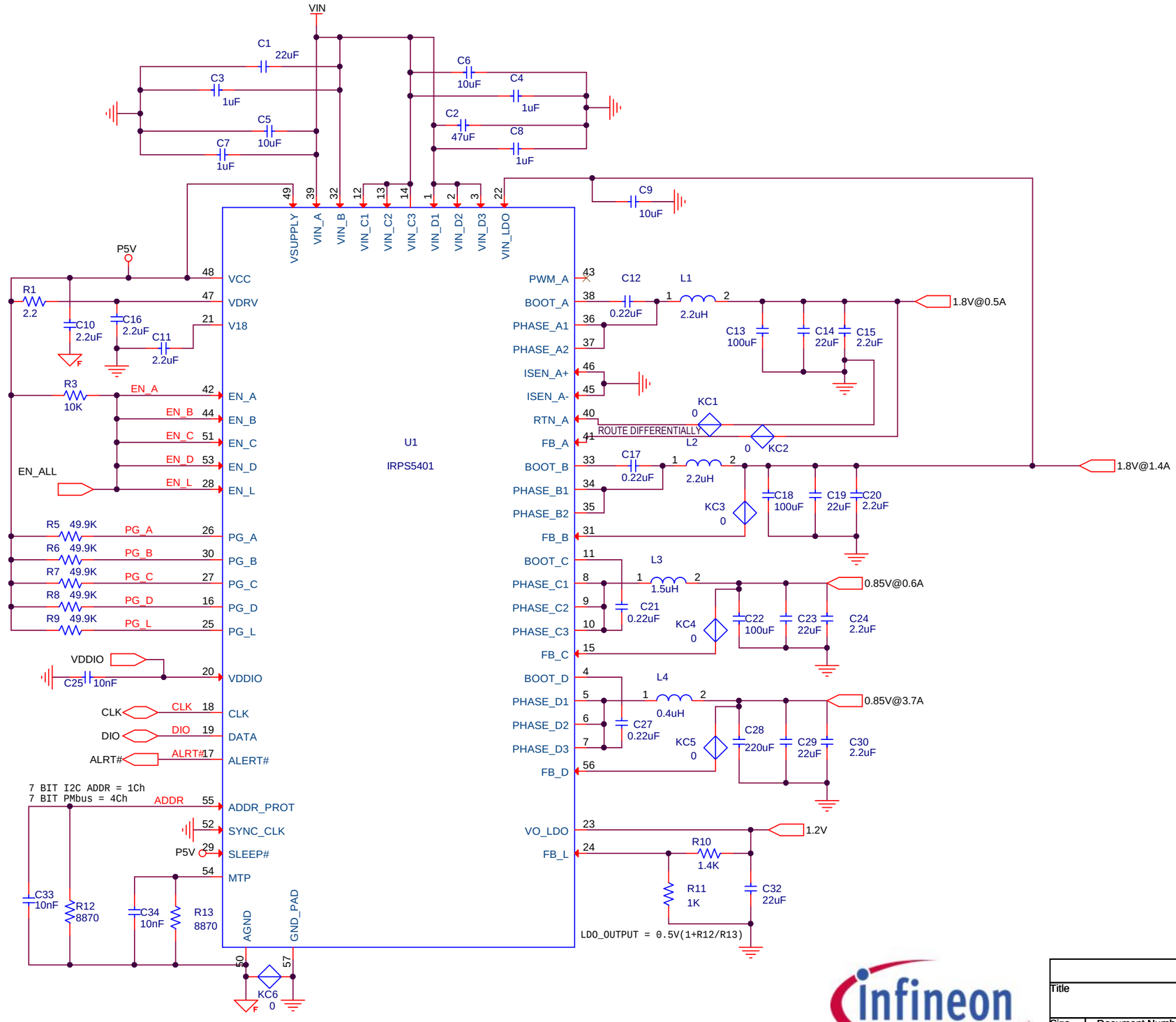

MACRO

IRPS5401 MACRO		
Title: ZYNQ 8870 CONFIG 1		
Size: B	Document Number: EV113-001	Rev: -
Date: Thursday, July 27, 2017	Sheet 1 of 1	