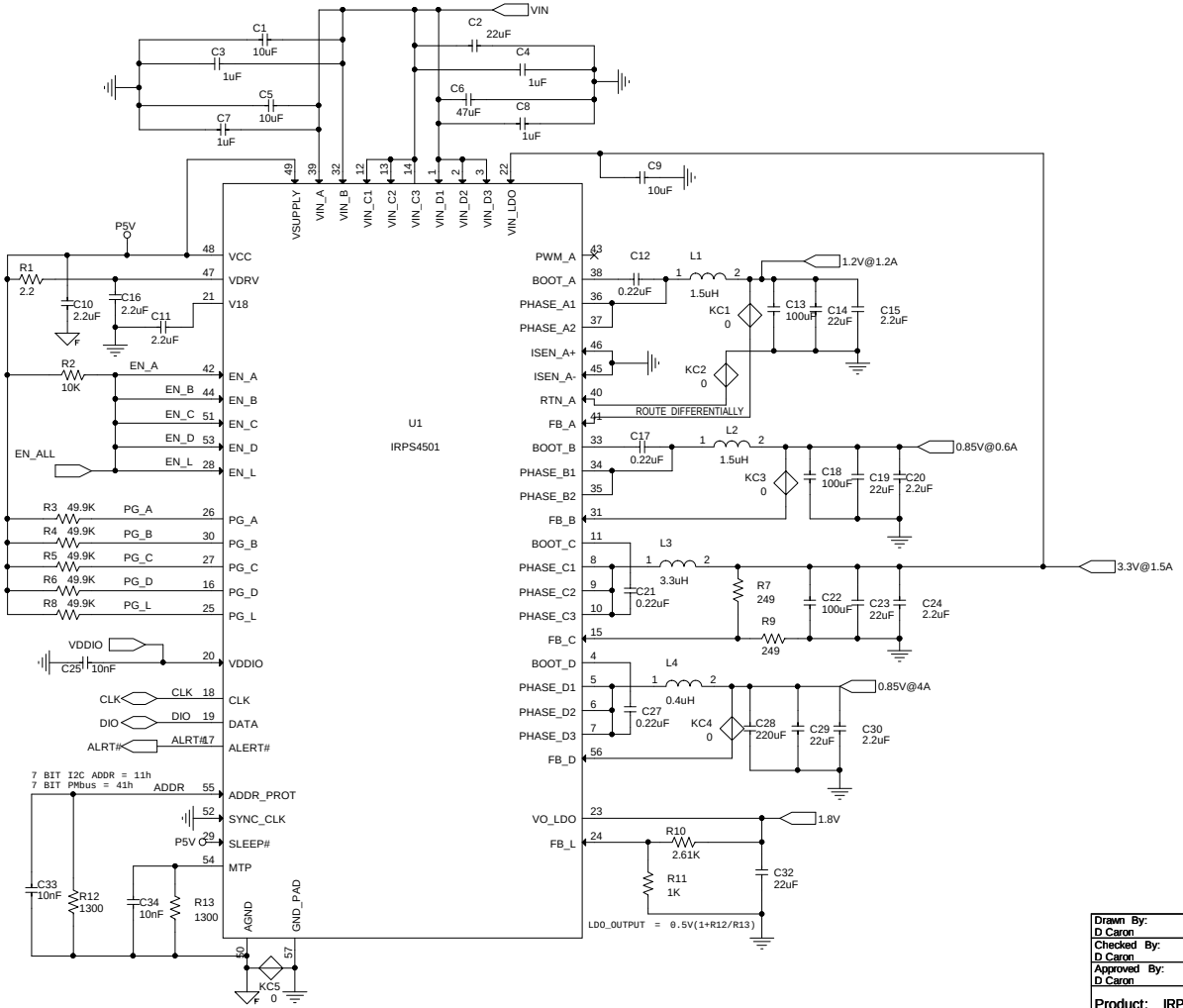

Drawn By: D Caron	Date: 15MAR2017	International Rectifier		
Checked By: D Caron	Date: 15MAR2017			
Approved By: D Caron	Date: 15MAR2017	IR Drawing Number: N/A	Sheet 1	Rev A

Product: IRPS5401

Title: Zync 1300 config 2