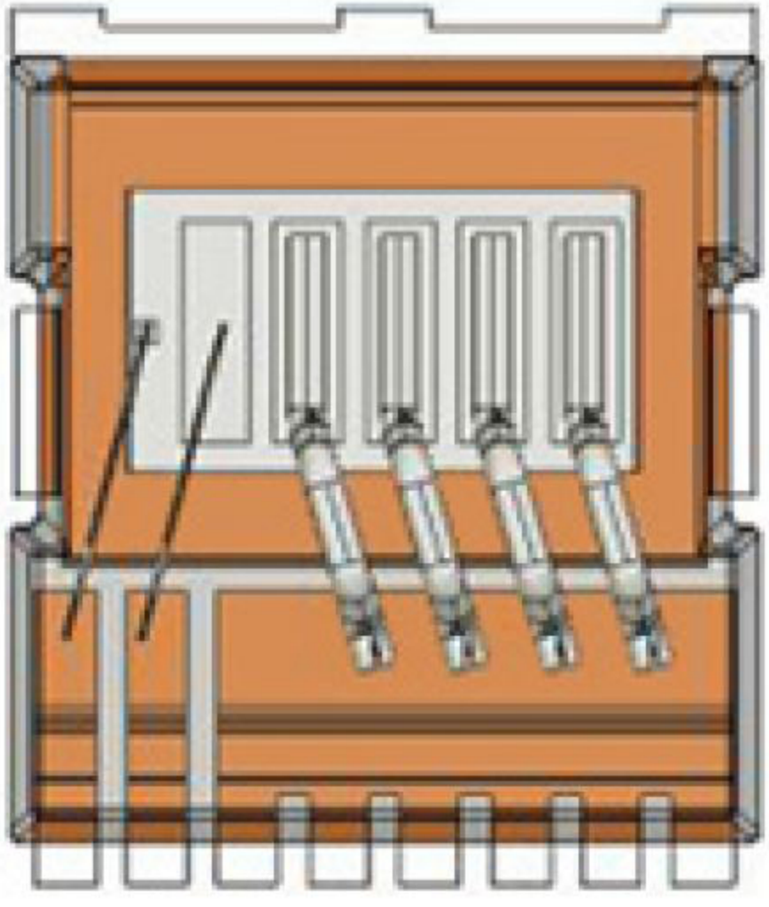

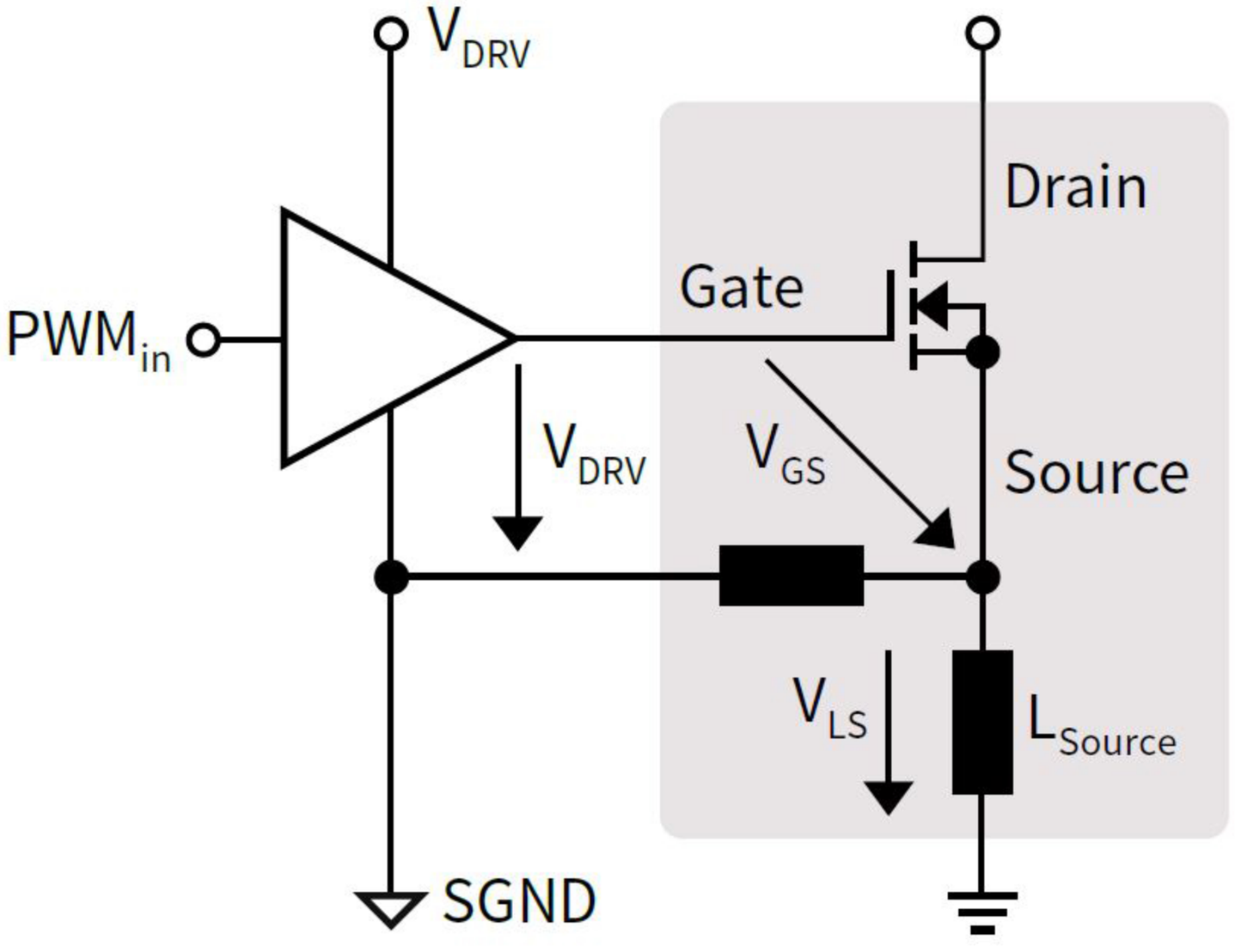
V_DRV
Drain
Gate
PWM_in
V_DRV
V_GS
Source
V_LS
L_Source
SGND