1600 W high efficiency PSU

Optimized form, fit and function platform for server application EVAL_1K6W_PSU_G7_DD

Meneses Herrera David (IFAT PMM ACDC AE)
Kutschak Matteo-Alessandro (IFAT PMM ACDC AE)
Zechner Florian (IFAT PMM ACDC AE)

Table of content

1 Introduction

2 Measurements and specifications

3 Summary and outlook

Copyright © Infineon Technologies AG 2018. All rights reserved.

Table of content

1 Introduction

2 Measurements and specifications

3 Summary and outlook

Copyright © Infineon Technologies AG 2018. All rights reserved.

Introduction

Introduction

- This Infineon evaluation board (EVAL_1K6W_PSU_G7_DD) represents a complete system solution for a 1600 W server power supply (PSU), which achieves the **80Plus® Titanium® standard**. The power supply is composed of a continuous conduction mode (CCM) bridgeless power factor corrector (PFC) using a bi-directional switch and a half-bridge LLC DC-DC resonant converter.

- To achieve the high efficiency results the evaluation board features several Infineon key components:
  - 600 V CoolMOS™ G7 superjunction MOSFET
  - CoolSiC™ Schottky diode 650 V G6
  - OptiMOS™ 6 40 V MOSFET
  - 1EDI20N12AF isolated and 2EDN7524F non-isolated gate drivers (EiceDRIVER™)
  - XMC1402 and XMC4200 microcontrollers
  - CoolSET™ quasi-resonant flyback controller

Summary of features:

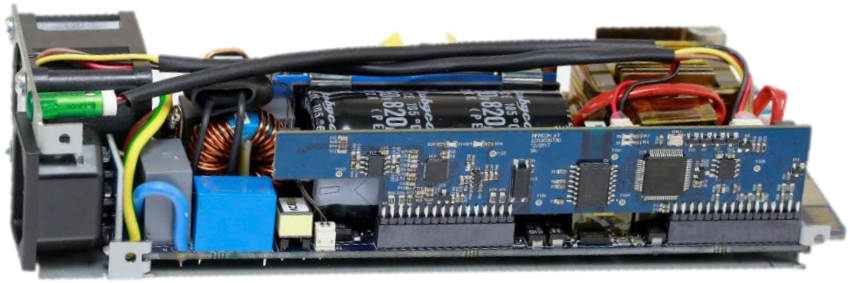

Input voltage:	176-265 V_{ac}
Output voltage:	12.2 V_{dc}
Output power:	1600 W
Switching frequency:	PFC 65 kHz
	LLC 160 kHz (resonant frequency)
Peak efficiency:	96%

Copyright © Infineon Technologies AG 2018. All rights reserved.

Introduction

Simplified diagram

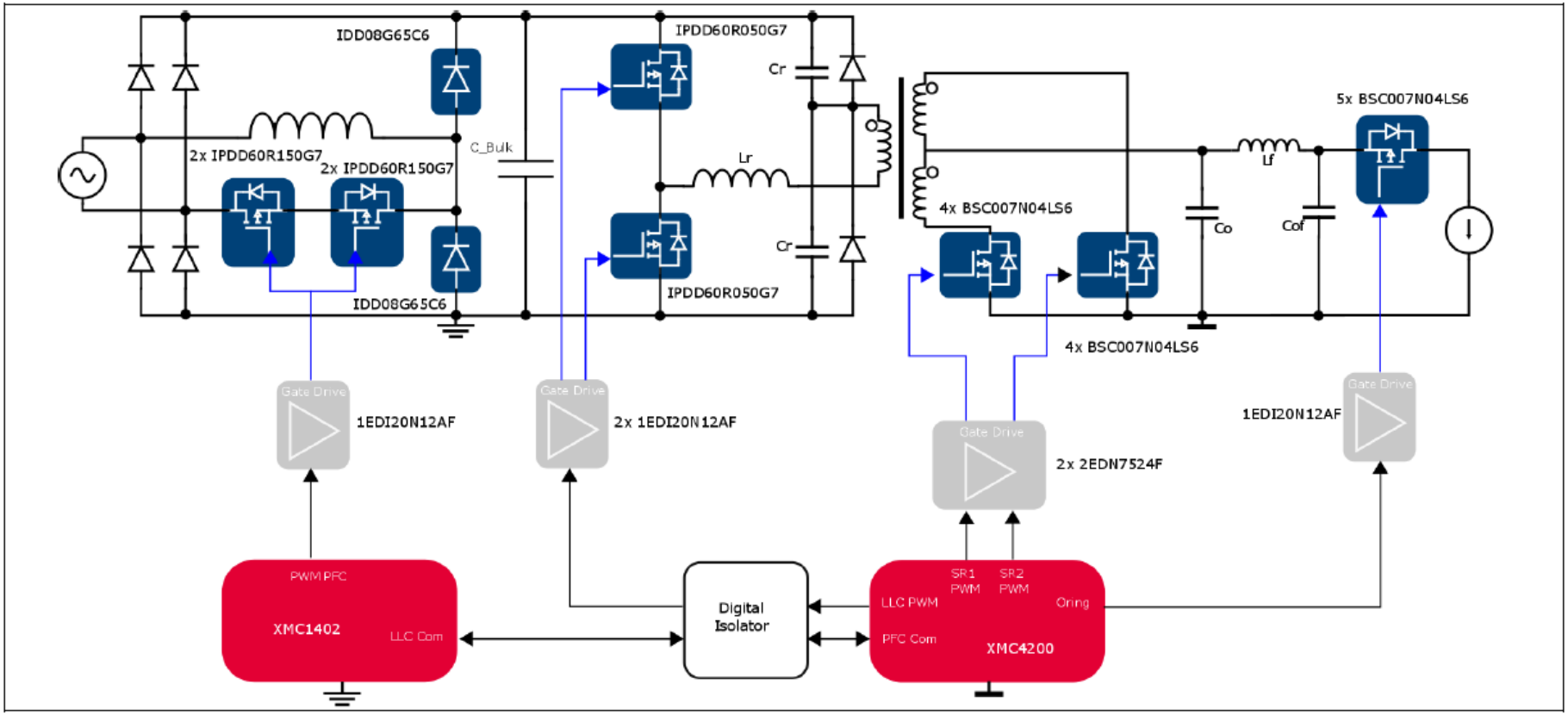

Copyright © Infineon Technologies AG 2018. All rights reserved.

Introduction

Placement of the different sections in the 1600 W PSU with Infineon's CoolMOS™ and CoolSiC™ products in Double DPAK (DDPAK) package

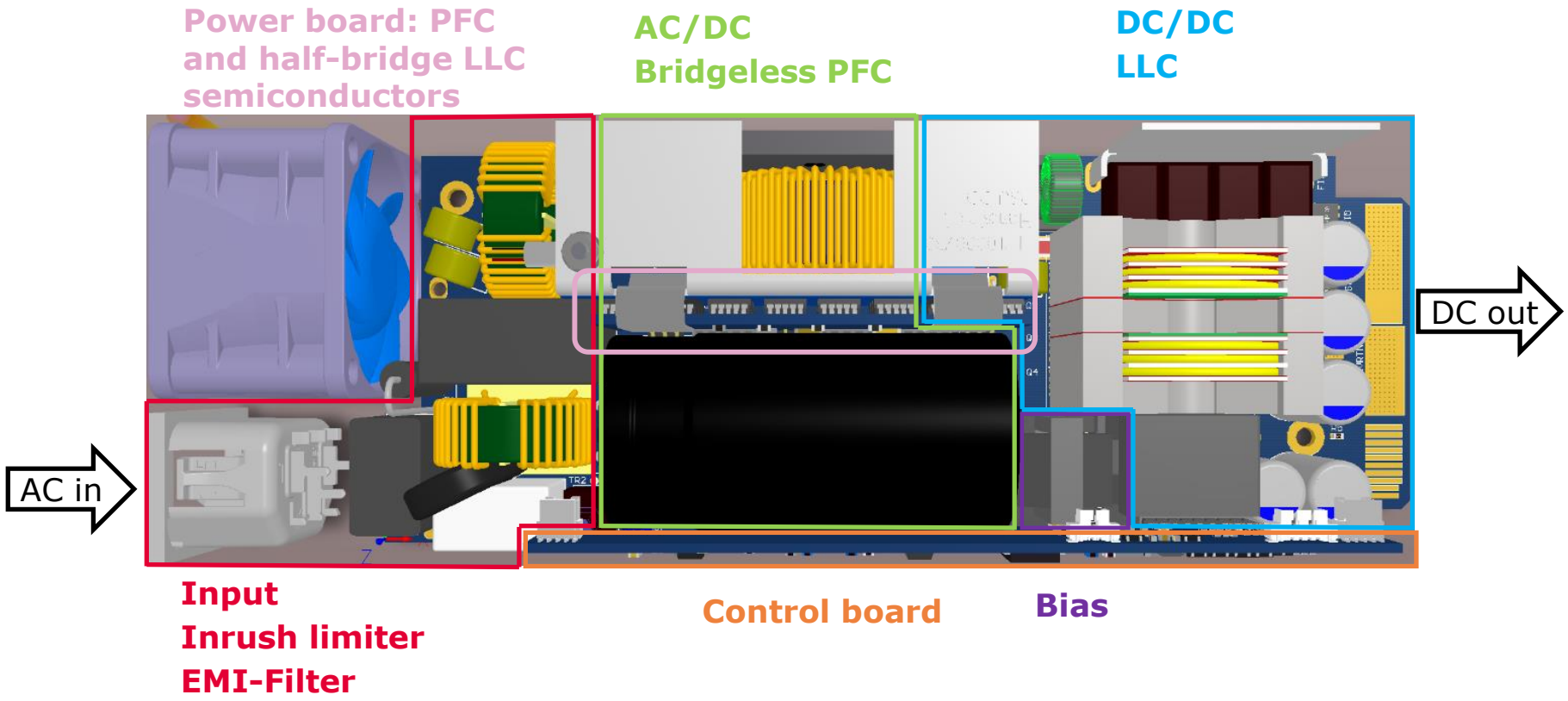

Copyright © Infineon Technologies AG 2018. All rights reserved.

Introduction

Power module: PFC and half-bridge LLC semiconductors

Mounting scheme for the DDPAK Infineon semiconductors in the PFC and half-bridge LLC configuration is shown below:

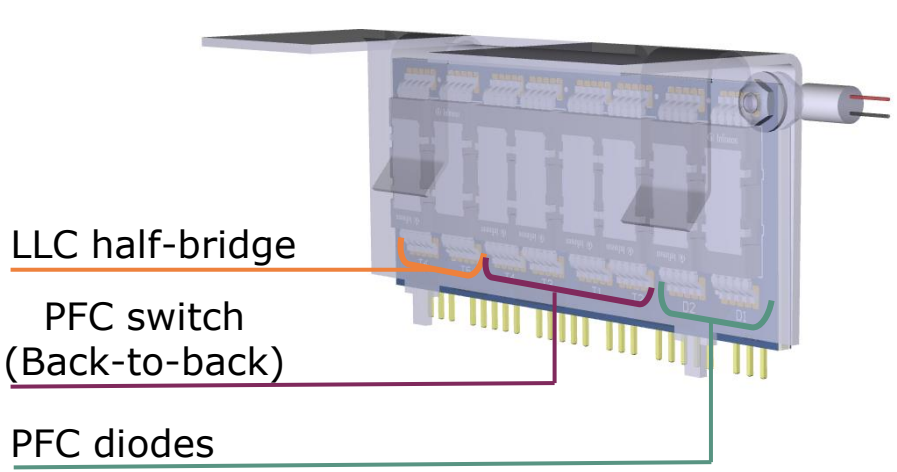

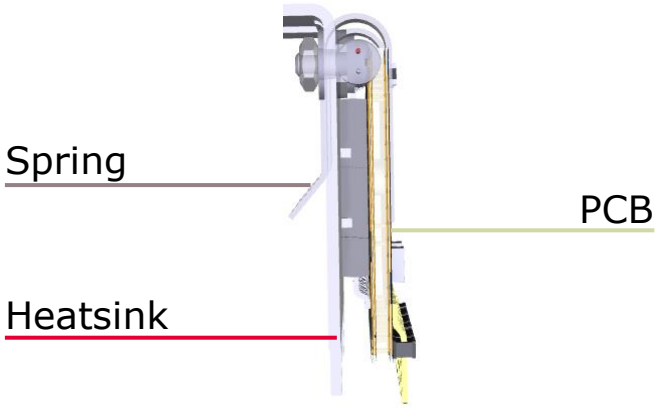

- The power board integrates eight DDPAK semiconductors - CoolMOS™ G7 switches and CoolSiC™ G6 Schottky diodes used for the PFC, in combination with the CoolMOS™ G7 half-bridge switches for the LLC
- It is designed for mass production as a single module by using a customized copper heatsink with a tinned surface and isolation foil which provides thermal conductivity and electrical isolation
- The module is soldered vertically into the main PCB of the PSU and positioned in front of the fan to optimize airflow.

Copyright © Infineon Technologies AG 2018. All rights reserved.

Table of content

1 Introduction

2 Measurements and specifications

3 Summary and outlook

Copyright © Infineon Technologies AG 2018. All rights reserved.

Measurements and specifications

Summary of specifications and test conditions for the 1600 W PSU

Test		Conditions	Specification	
Efficiency test		230Vrms 50Hz/60Hz, 10% to 100% load	80Plus® Titanium® efficiency. η_{pk} = 96% at 800W (50% load)	
Current THD		230Vrms 50Hz/60Hz, 10% to 100% load	THDi < 10% from 20% load	
Power factor		230Vrms 50Hz/60Hz, 10% to 100% load	PF > 0.95 from 20% load	
Output voltage			12.2V	
Steady state Vout ripple		230Vrms 50/60Hz, 10% to 100% load	|ΔVout| < 120 mVpk-pk	
Inrush current		230Vrms, 50Hz/60Hz, measured on the first AC cycle	Iin_peak < 30A	
Power line disturbance	AC lost (Hold-up time)	230Vrms 50Hz, 10ms at 100% load, 20ms at 50% load	|ΔVout| < 240 mVpk	No damage: * PSU soft start if bulk voltage under 310V * PSU soft start if Vac out of range for certain time
	Voltage sag	200Vrms 50Hz/60Hz, Different sag conditions; 100% load		
Brown out			174V ON; 168V OFF	
Load transient		1 A ↔ 66 A, 0.5 A/µs	|ΔVout| < 240 mVpk	
		66 A ↔ 133 A, 0.5 A/µs		
Over current protection		30 s at 141 A	LLC OFF. Resume of operation requires bulk voltage to drop under 310V	
		10 s at 149 A		
		1ms at 168 A		
		Output terminals in shortcircuit	Detection within switching cycle. Resume of operation requires bulk voltage to drop under 310V	
EMI		230Vrms 50Hz, full load, resistive load, lab set-up	Complies with Class B limits	

Copyright © Infineon Technologies AG 2018. All rights reserved.

Measurements and specifications

Efficiency results

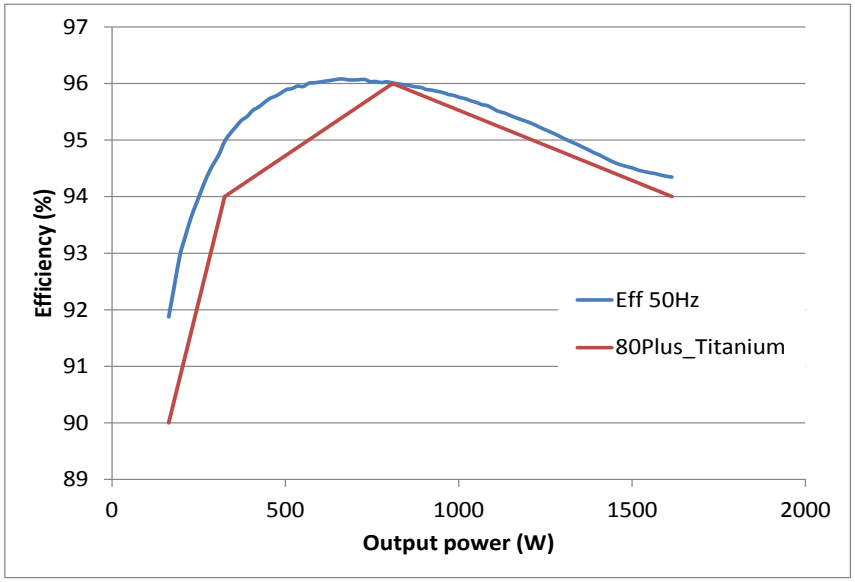

Measured efficiency at 230 V 50 Hz input voltage.

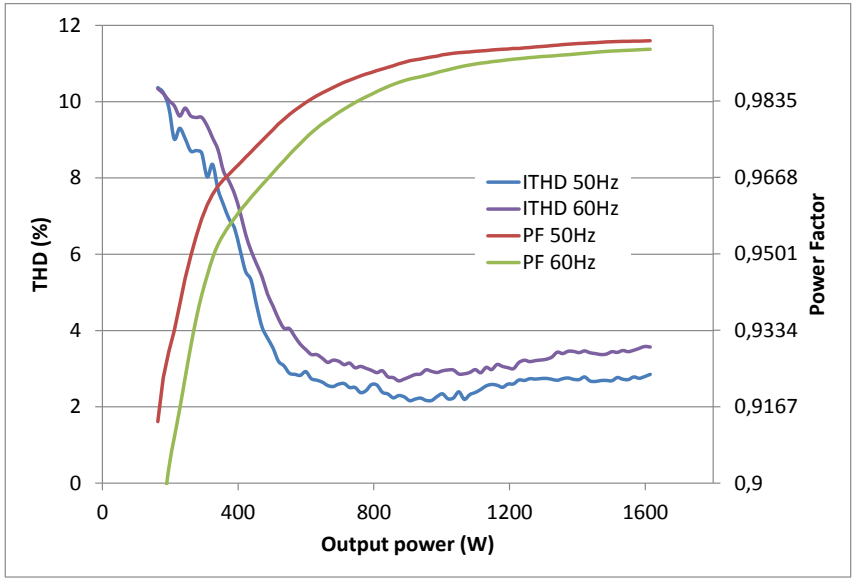

Measured total harmonic distortion (THD) and power factor at 230 V input voltage for both 50 Hz and 60 Hz.

Copyright © Infineon Technologies AG 2018. All rights reserved.

Table of content

1 Introduction

2 Efficiency results

3 Summary and outlook

Copyright © Infineon Technologies AG 2018. All rights reserved.

Summary and outlook

- The trend in the field of switched mode power supplies (SMPS) is a move towards power density and optimized cost. To reach the required higher power density levels, heat dissipation must be minimized, making efficiency key parameter in the process
- The 800 W server power supply EVAL_800W_PSU_3P_P7 and EVAL_800W_PSU_4P_C7 evaluation boards developed with Infineon semiconductors, are great examples how to achieve high efficiency, similar to the 80Plus® Platinum® efficiency standards
- Infineon's new **EVAL_1K6W_PSU_G7_DD PSU** evaluation board keeps the same form factor as the previously described 800W server PSU, while providing twice the power. Therefore, the power density increased to 44 W/in^3 in the 1600 W design
- There is always a relationship between form factor and increasing power density. Reducing the heat dissipation is a result of higher efficiency
- *This server power supply allows the implementation and test of future Infineon devices and technologies. Further modifications of the presented power supply will be possible by updating different Infineon products such as EiceDRIVER™ 2EDF isolated drivers for the LLC stage, 5th generation CoolSET™ in the bias supply or CoolMOS™ as a relay replacement. In the case of OptiMOS™ 6, those who would like more information are requested to check the Infineon website*

Copyright © Infineon Technologies AG 2018. All rights reserved.

Summary and outlook

Dimension

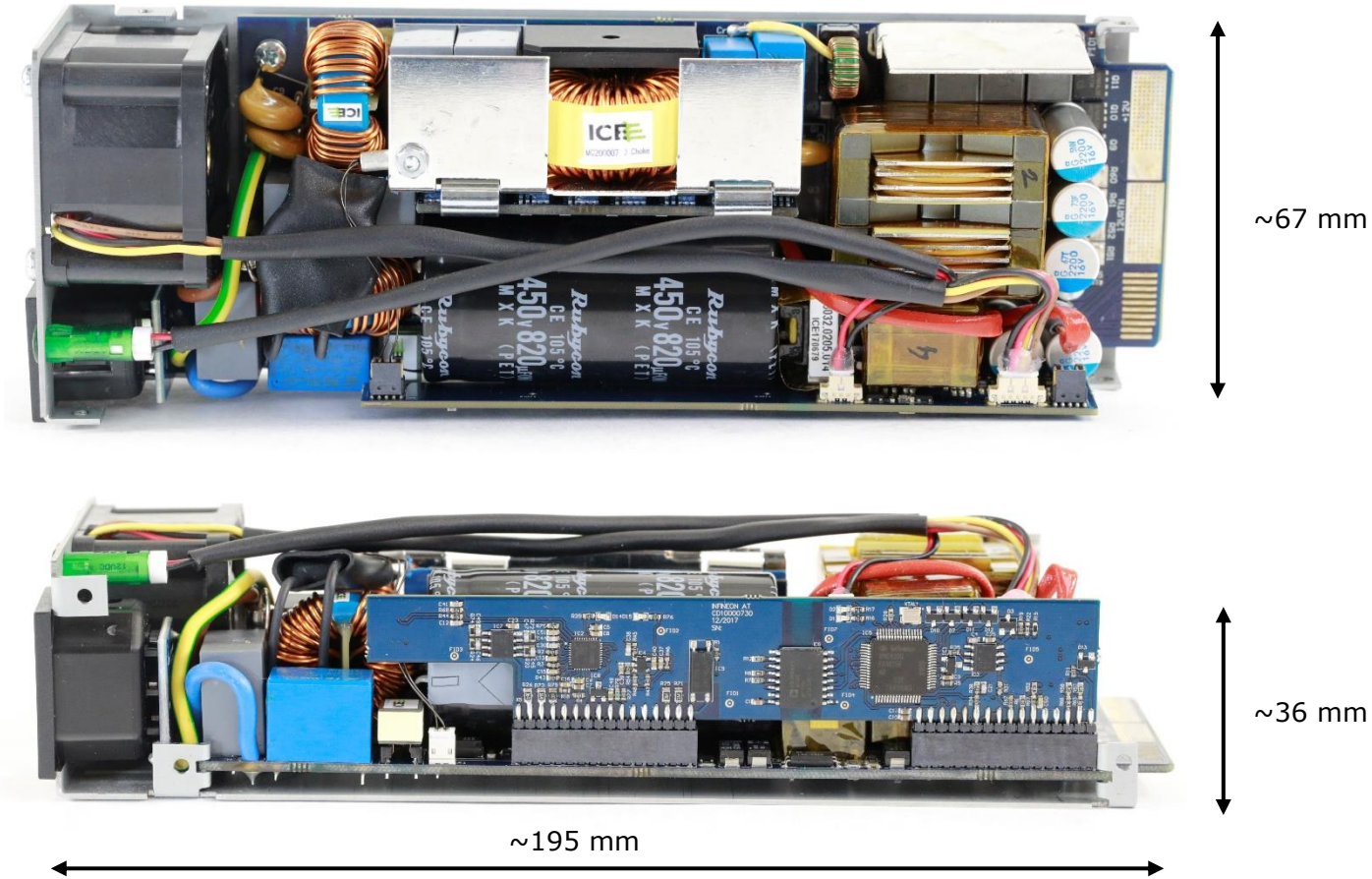

Copyright © Infineon Technologies AG 2018. All rights reserved.

Support



Technical Material	› Application Notes › Datasheets	› https://www.infineon.com/eval-1k6w-psu-g7-dd
Evaluation Boards	› Evaluation Boards › Demoboards › Reference Designs	› www.infineon.com/evaluationboards
Videos	› Technical Videos › Product Information Videos	› www.infineon.com/mediacenter

Copyright © Infineon Technologies AG 2018. All rights reserved.

Support
Online tools and services

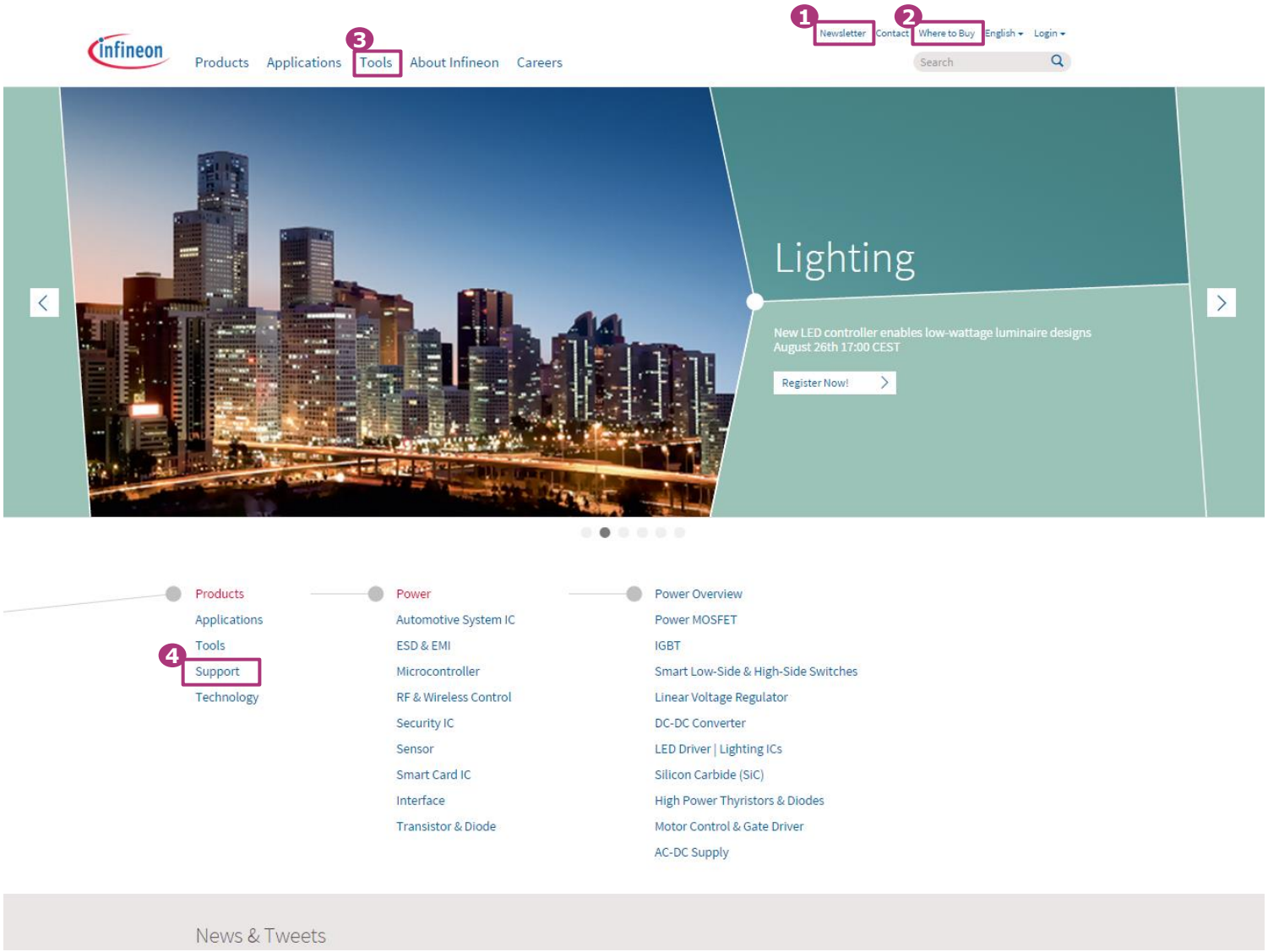

1. **Subscribe to Newsletter**
2. **Where to Buy**
3. **Tools, Finders and Selectors**
4. **Support**

Copyright © Infineon Technologies AG 2018. All rights reserved.



Part of your life. Part of tomorrow.

Infineon