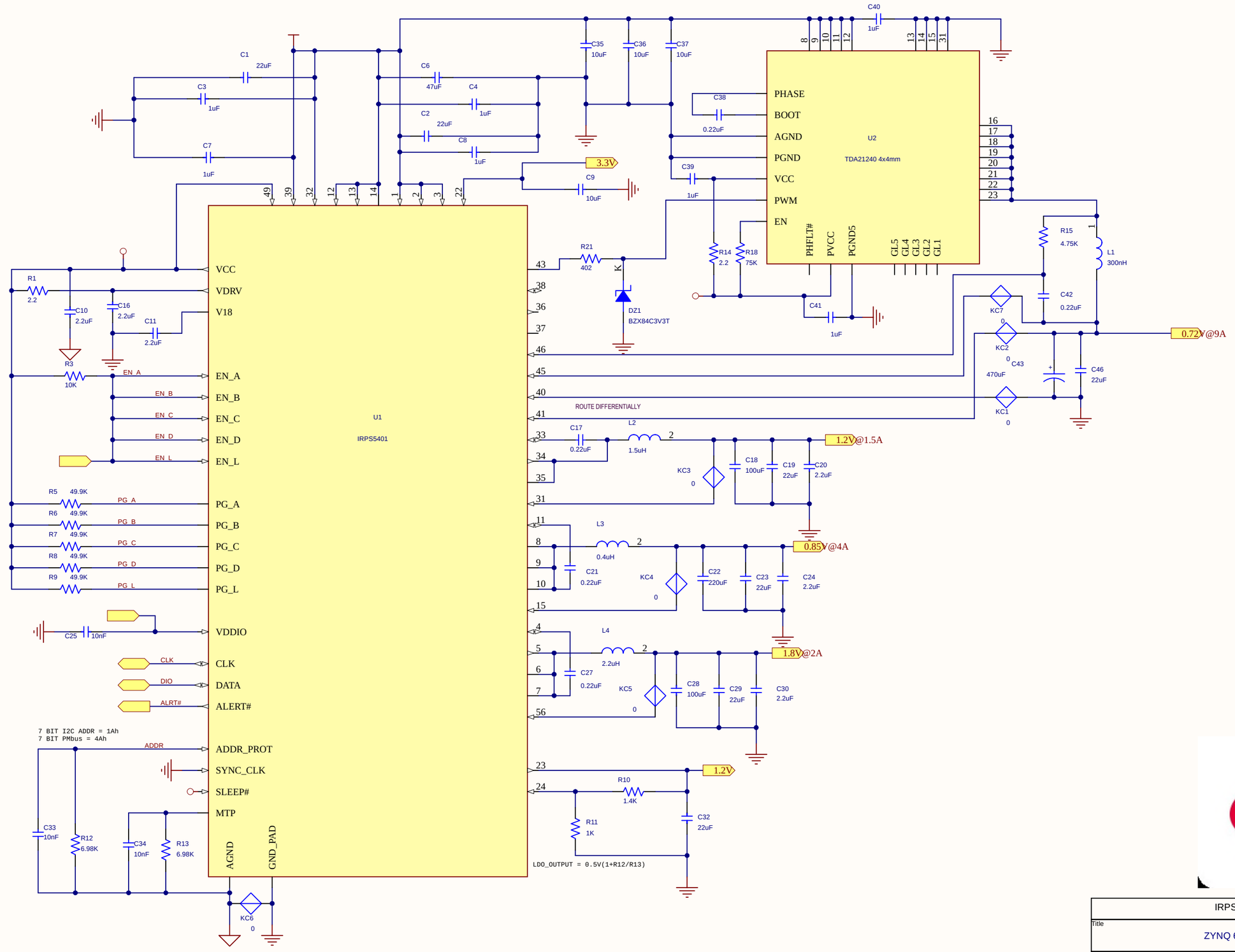


**MACRO**

| | | |
|---|---|---|
| IRPS5401 MACRO | | |
| Title: ZYNQ 6980 CONFIG 11 | | |
| Size: A | Document Number: EV113-011 | Rev: - |
| Date: | Sheet 1 of 1 | |