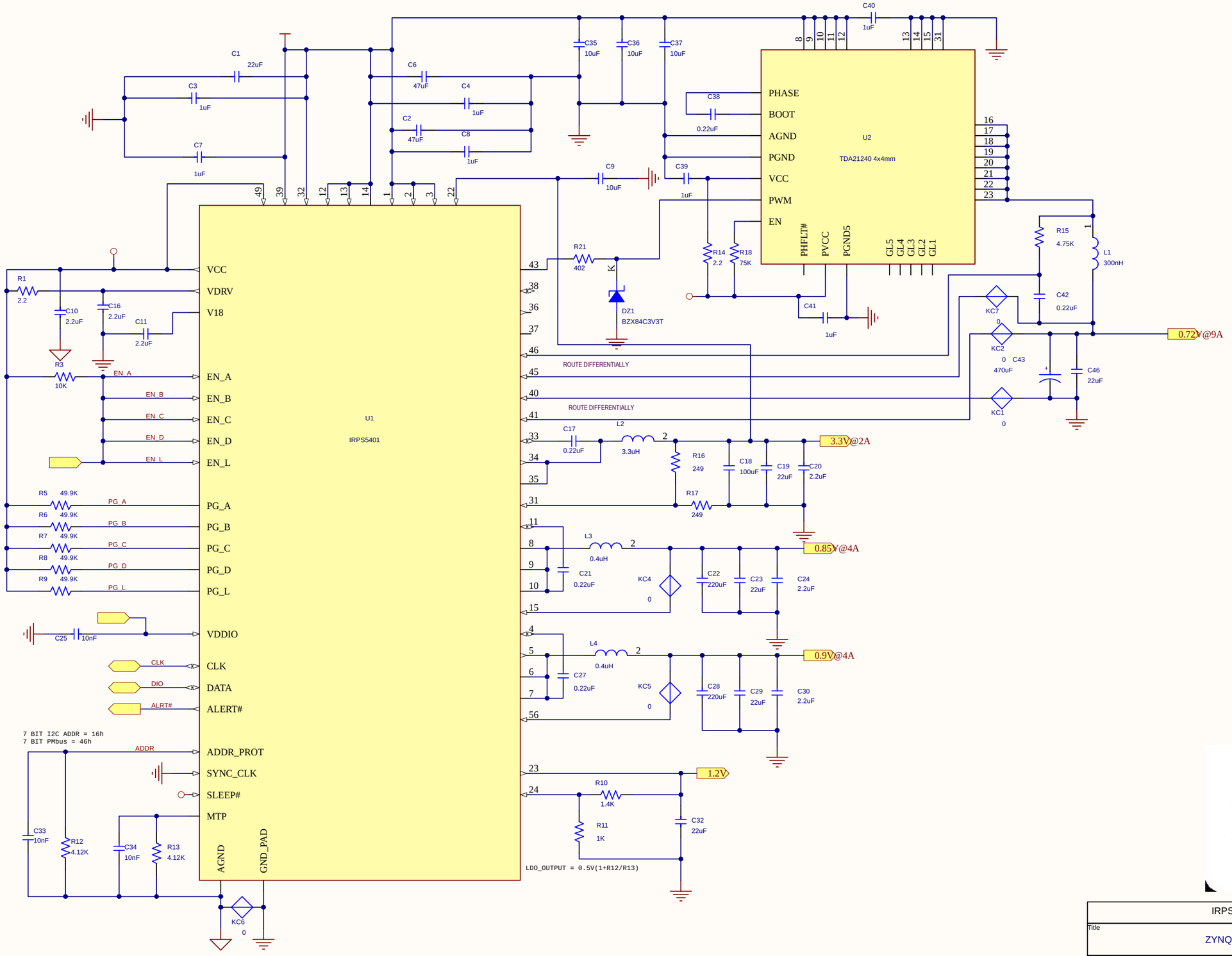
U1
IRPS5401
VCC
VDRV
V18
EN_A
EN_B
EN_C
EN_D
EN_L
PG_A
PG_B
PG_C
PG_D
PG_L
VDDIO
CLK
DATA
ALERT#
ADDR_PROT
SYNC_CLK
SLEEP#
MTP
AGND
GND_PAD
U2
TDA21240 4x4mm
PHASE
BOOT
AGND
PGND
VCC
PWM
EN
PHFLT#
PVCC
PGND5
GL5
GL4
GL3
GL2
GL1
DZ1
BZX84C3V3T
ROUTE DIFFERENTIALLY
ROUTE DIFFERENTIALLY
L2
3.3uH
L3
0.4uH
L4
0.4uH
3.3V@2A
0.85V@4A
0.9V@4A
1.2V
0.72V@9A
7 BIT I2C ADDR = 16h
7 BIT PMbus = 46h
LDO_OUTPUT = 0.5V(1+R12/R13)
MACRO
IRPS5401 MACRO
ZYNQ 4120 CONFIG 7
EV113-007
Size
A
Document Number
Rev
-
Date:
Sheet 1 of 1