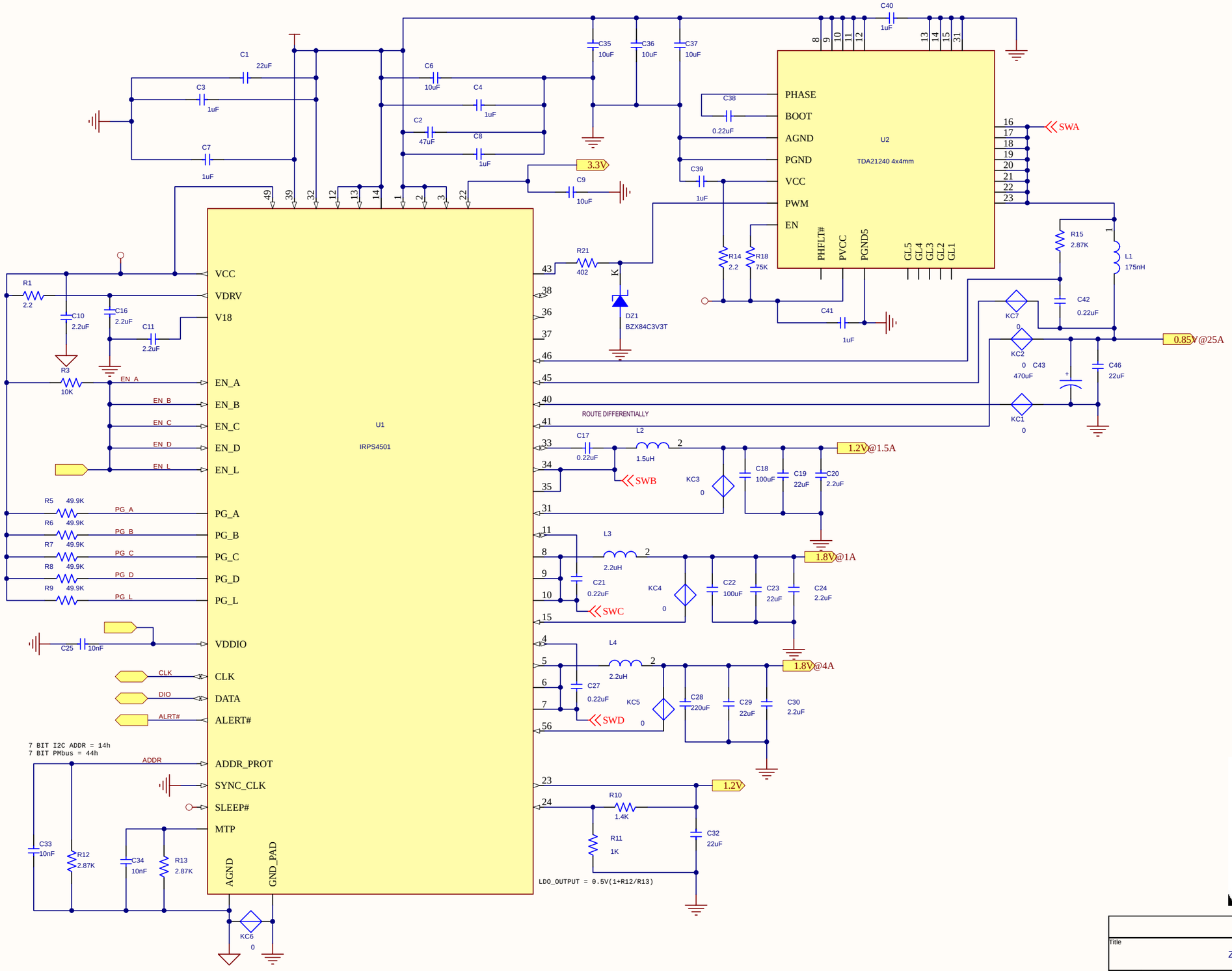

MACRO

Title	IRPS5401 MACRO
	ZYNQ 2870 CONFIG 5
Size: A	Document Number: EV113-005
Rev: -	
Date:	Sheet 1 of 1