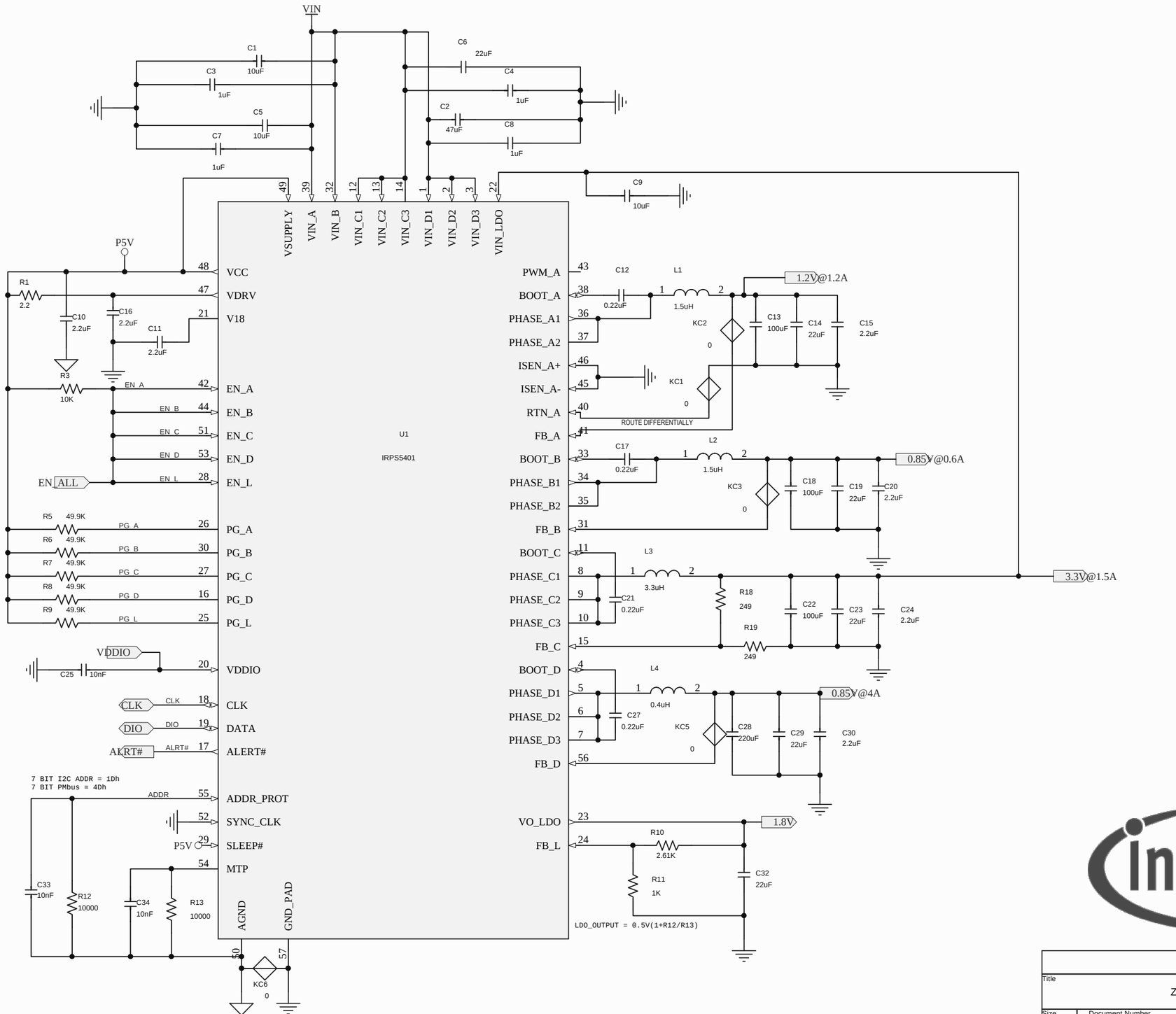

MACRO

Title	IRPS5401 MACRO
	ZYNQ 10000 CONFIG 2
Size: A	Document Number: EV113-002
Rev: -	
Date:	Sheet 1 of 1