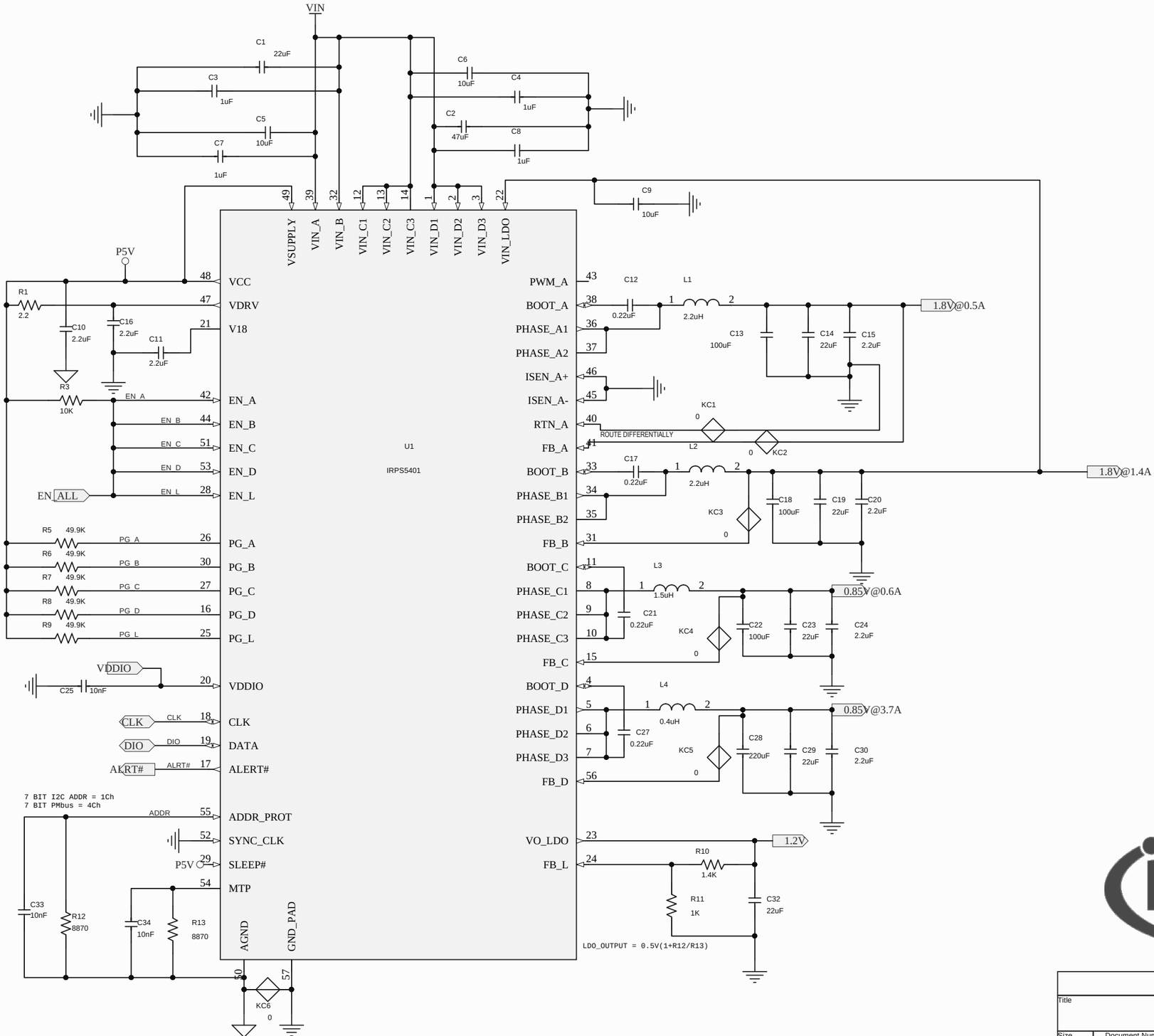

MACRO

	IRPS5401 MACRO
Title	ZYNQ 8870 CONFIG 1
Size: A	Document Number: EV113-001
Rev: -	
Date:	Sheet 1 of 1