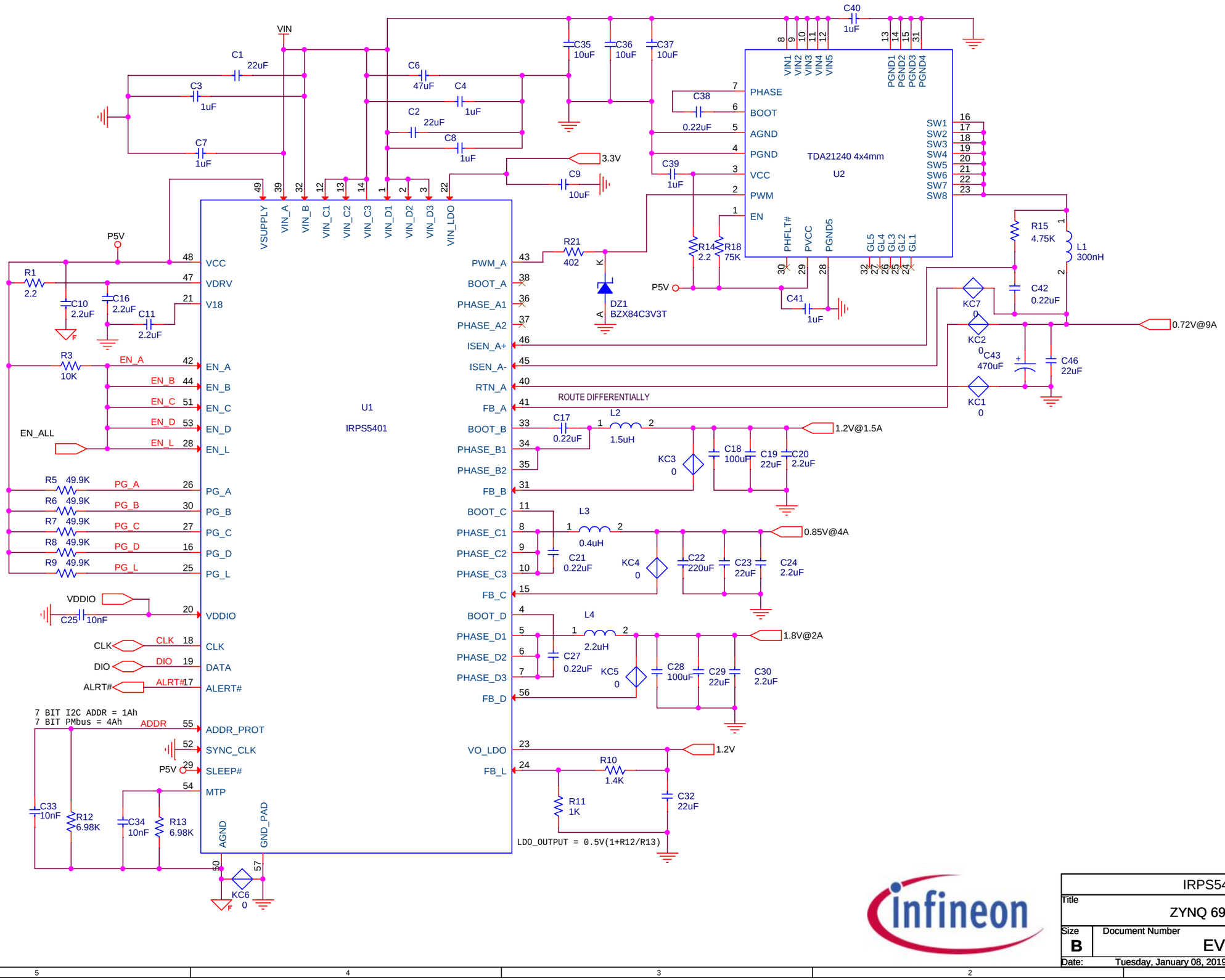

MACRO

	IRPS5401 MACRO	
Title	ZYNQ 6980 CONFIG 11	
Size: B	Document Number: EV113-011	Rev: -
Date: Tuesday, January 08, 2019	Sheet 1 of 1	