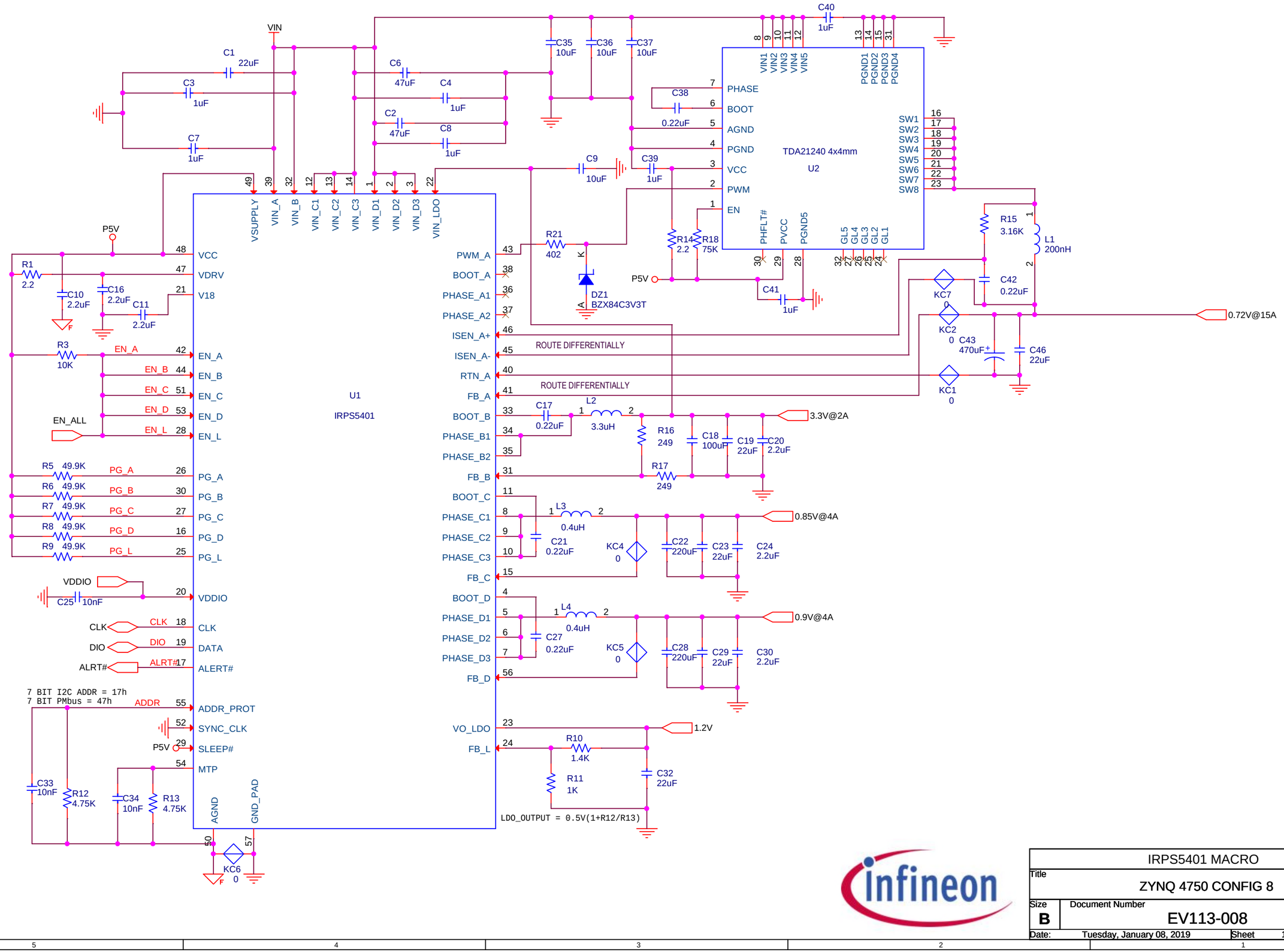

MACRO

Title	IRPS5401 MACRO	
	ZYNQ 4750 CONFIG 8	
Size: B	Document Number: EV113-008	Rev: -
Date: Tuesday, January 08, 2019	Sheet 1 of 1	