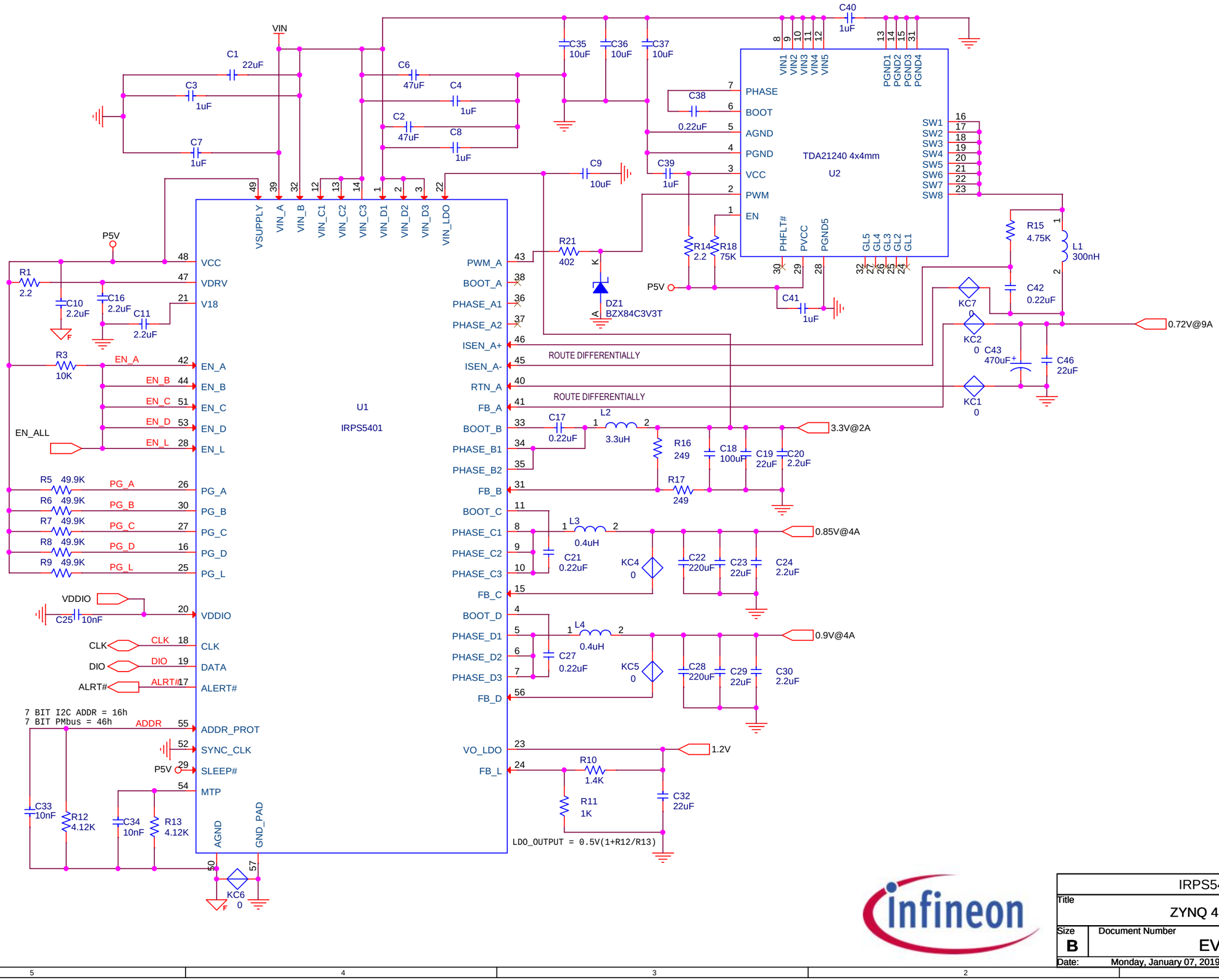

MACRO

IRPS5401 MACRO			
Title: ZYNQ 4120 CONFIG 7			
Size: B	Document Number: EV113-007		Rev: -
Date: Monday, January 07, 2019	Sheet 1 of 1		