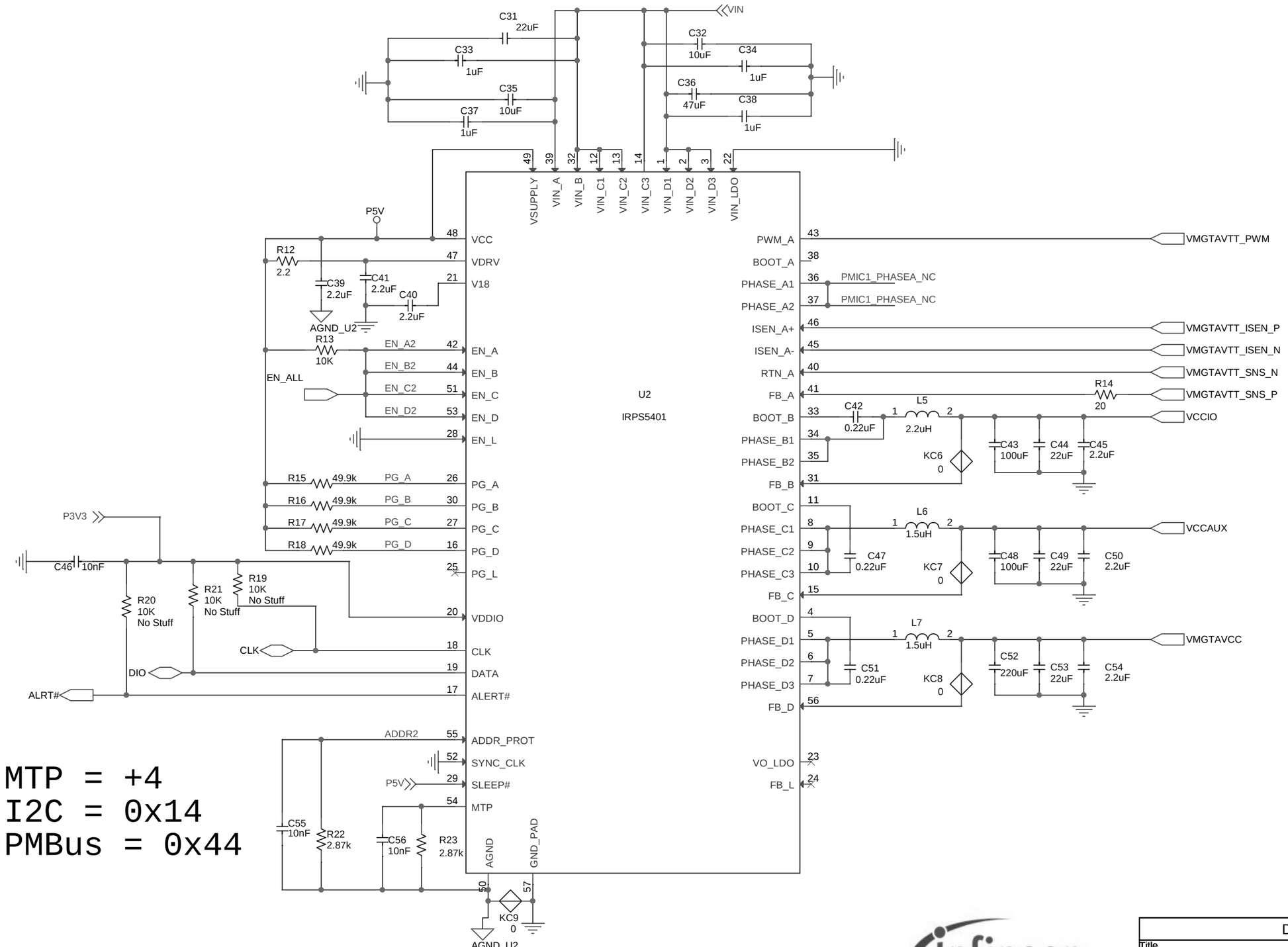

MTP = +4
I2C = 0x14
PMBus = 0x44

DEMO BOARD			
Title: VERSAL_VM1802_UC1			
Size: B	Document Number: SCH_EV121-C		Rev: E1
Date: Wednesday, April 17, 2019	Sheet 1 of 8		

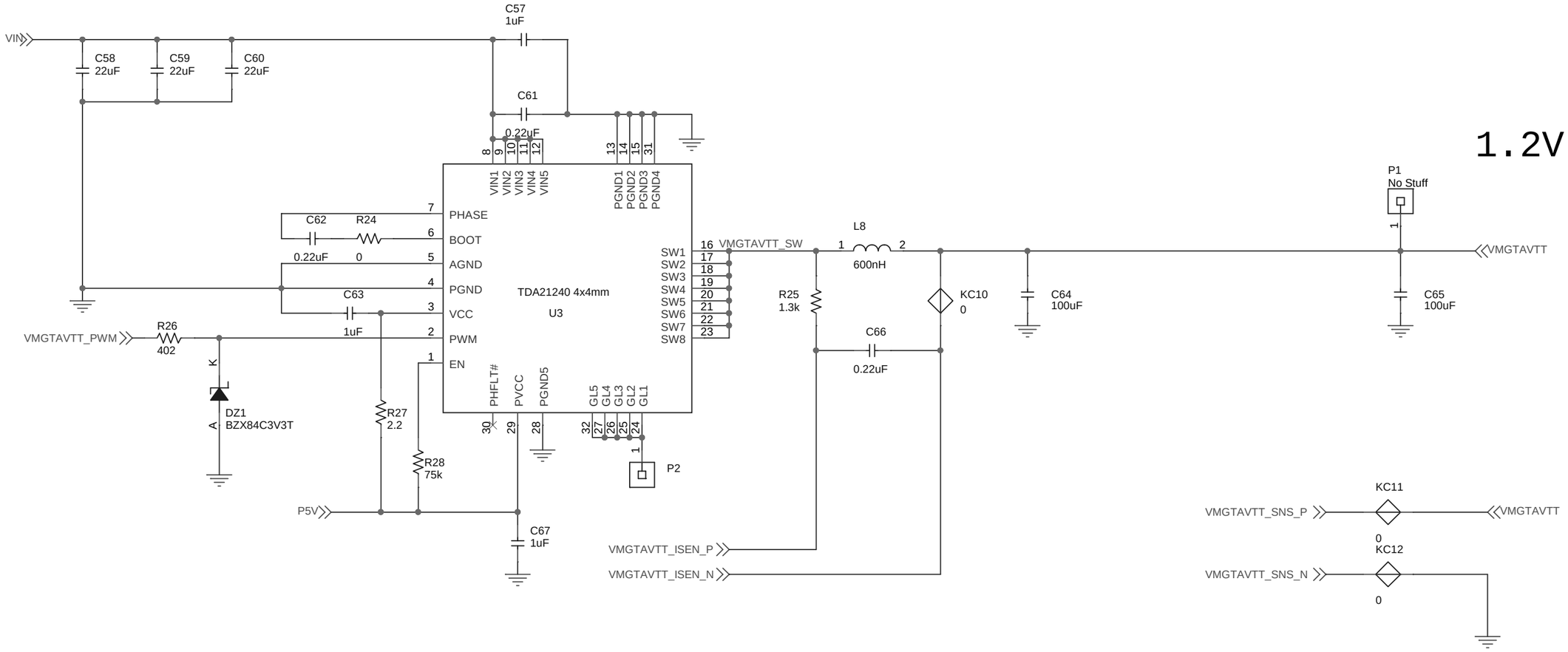

DEMO BOARD		
Title: VERSAL_VM1802_UC1		
Size: B	Document Number: SCH_EV121-C	Rev: E1
Date: Wednesday, April 24, 2019	Sheet 2 of 8	

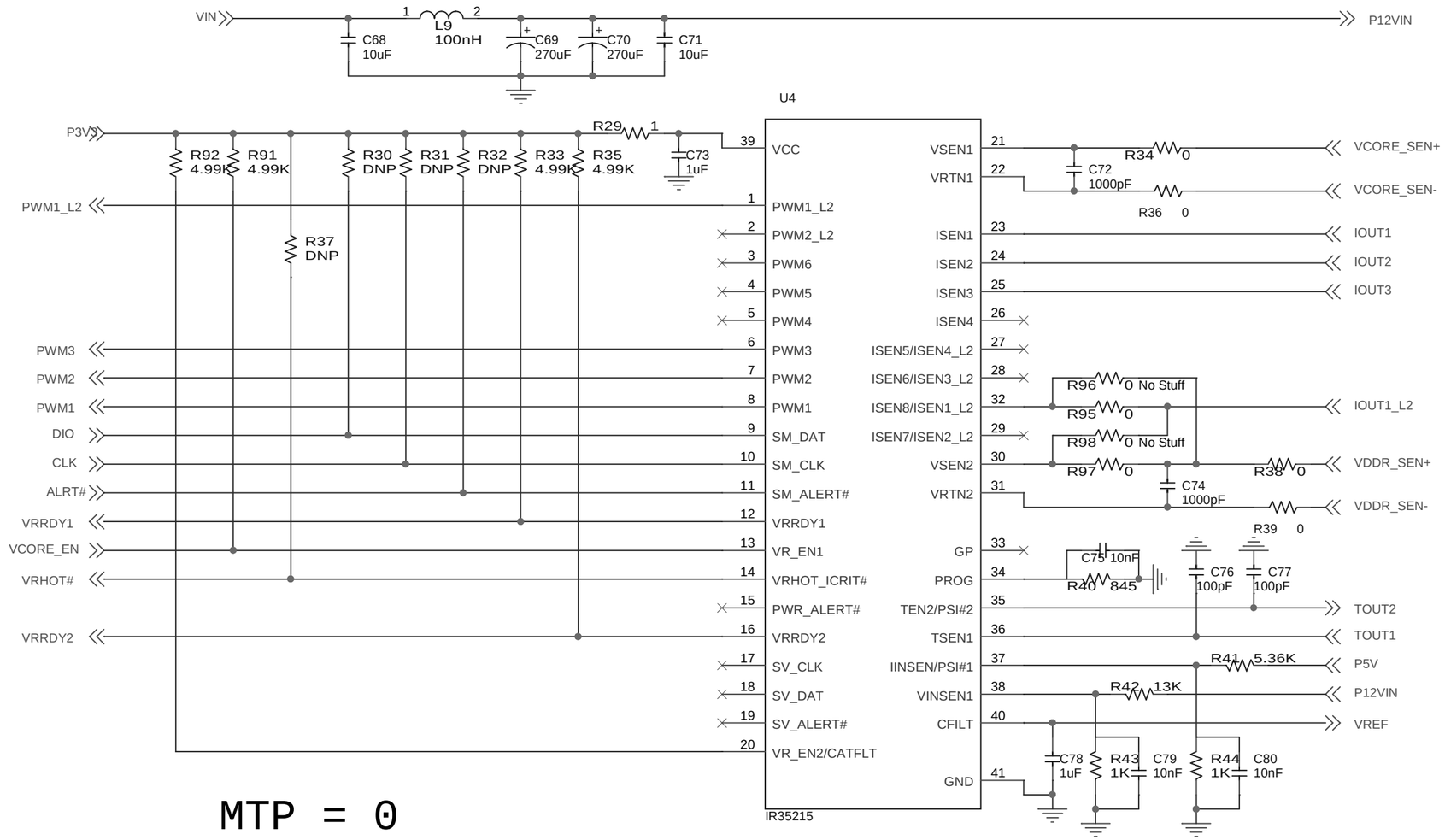

MTP = 0
I2C = 0x10
PMBus = 0x40

	R97	R96	R98	R95	R40	C72	C74	C75
IR35215	0 Ohm	No Stuff	No Stuff	0 Ohm	845	1000pF	1000pF	10nF
XDPE1228x	No Stuff	0 Ohm	0 Ohm	No Stuff	10.2k	220pF	220pF	No Stuff

DEMO BOARD

Title: VERSAL_VM1802_UC1

Size: B | Document Number: SCH_EV121-C | Rev: E1

Date: Thursday, April 25, 2019 | Sheet 3 of 8

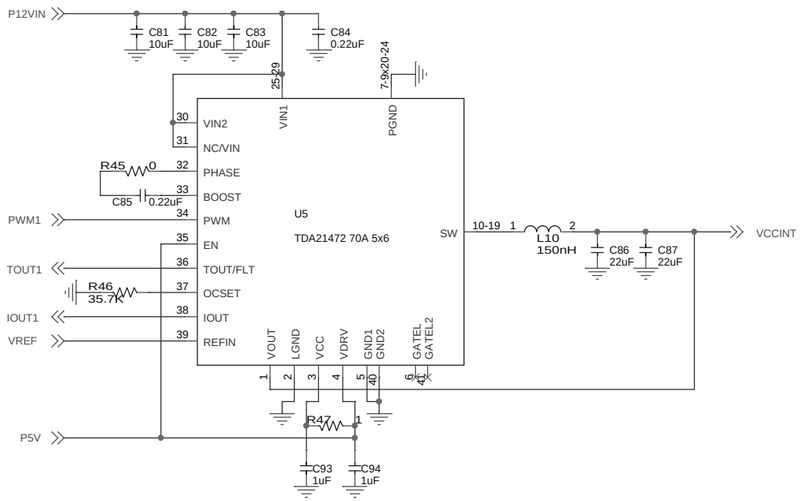

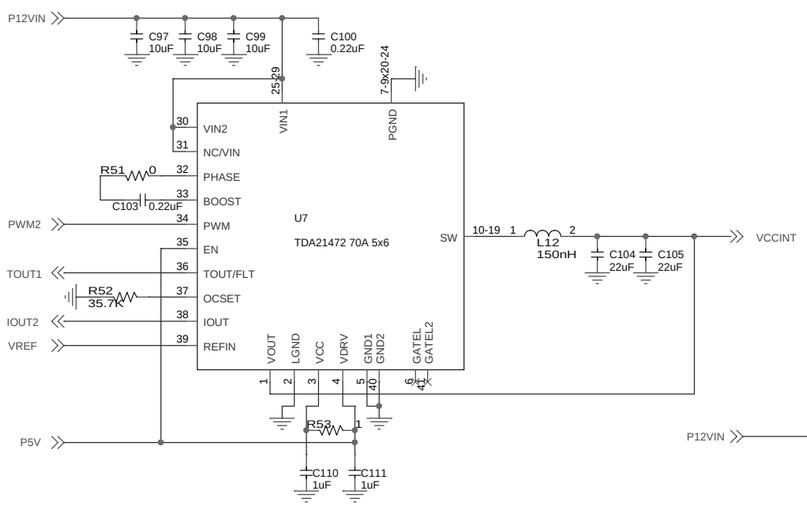

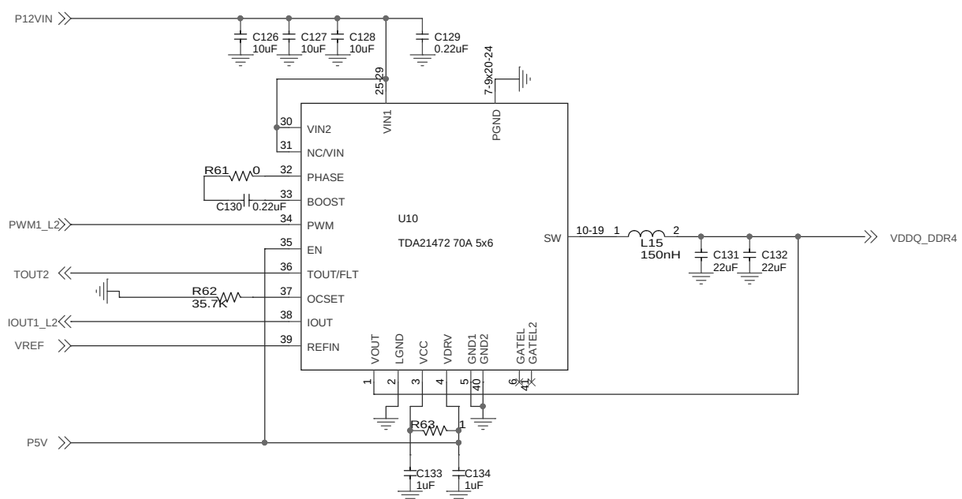

DEMO BOARD		
Title: VERSAL_VM1802_UC1		
Size: Custom	Document Number: SCH_EV121-C	Rev: E1
Date: Wednesday, April 17, 2019	Sheet 4 of 8	

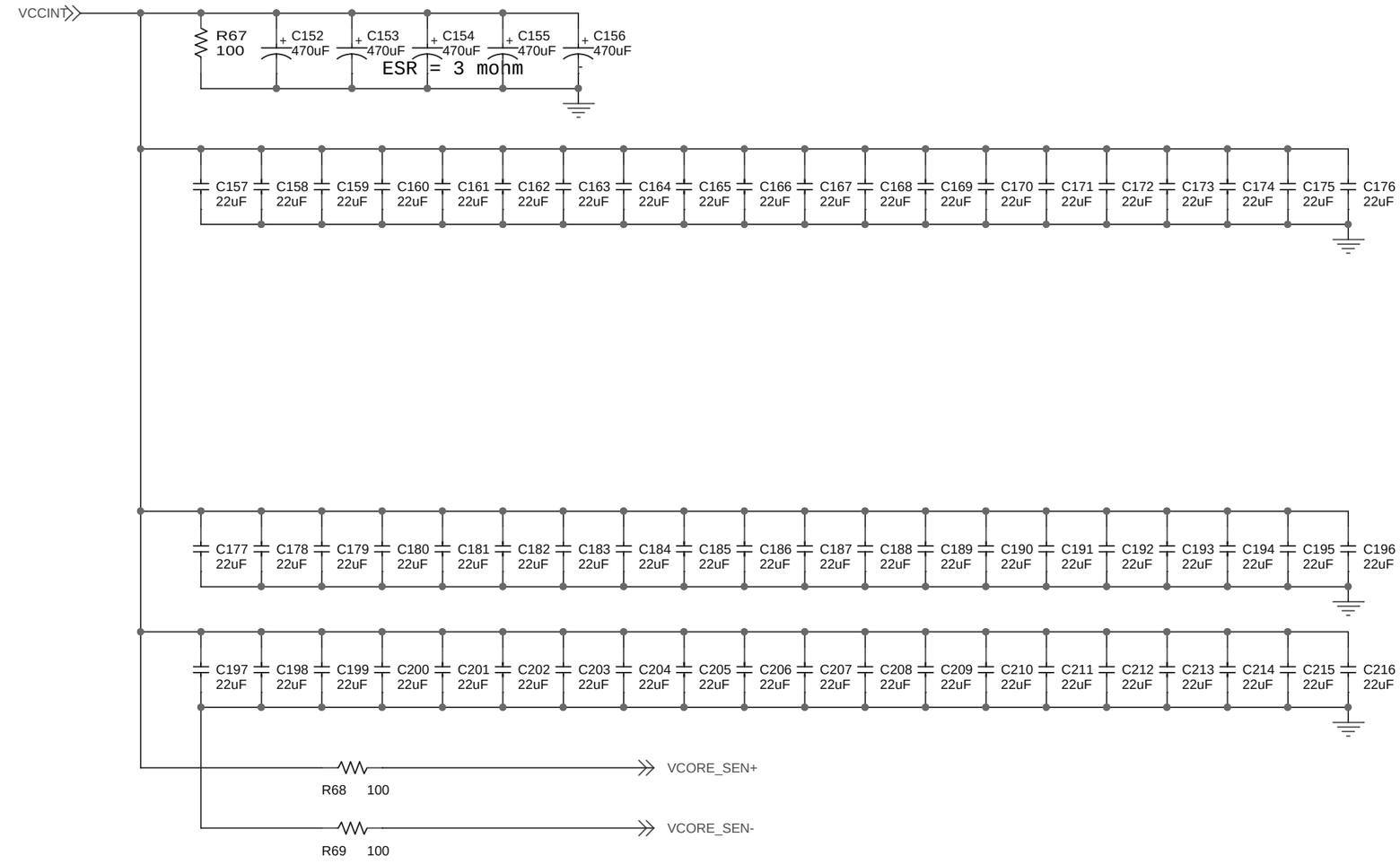

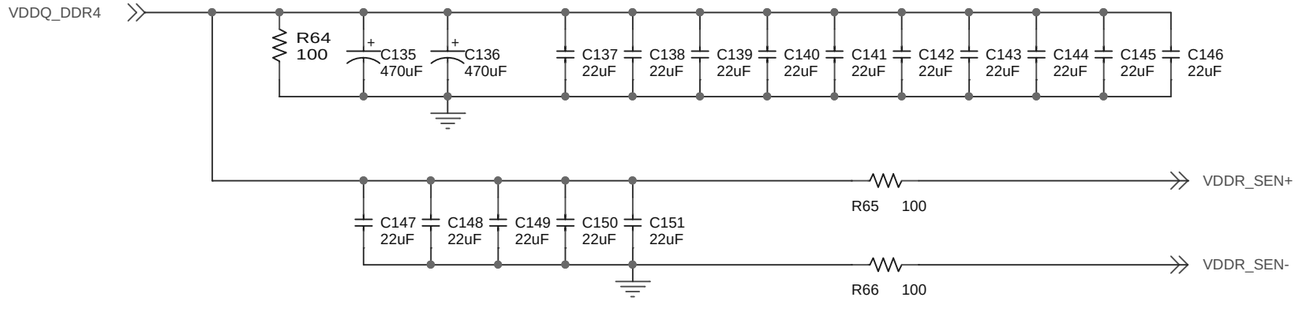

DEMO BOARD

Title: VERSAL_VM1802_UC1

Size	Document Number	Rev
B	SCH_EV121-C	E1

Date: Wednesday, April 17, 2019 Sheet 5 of 8

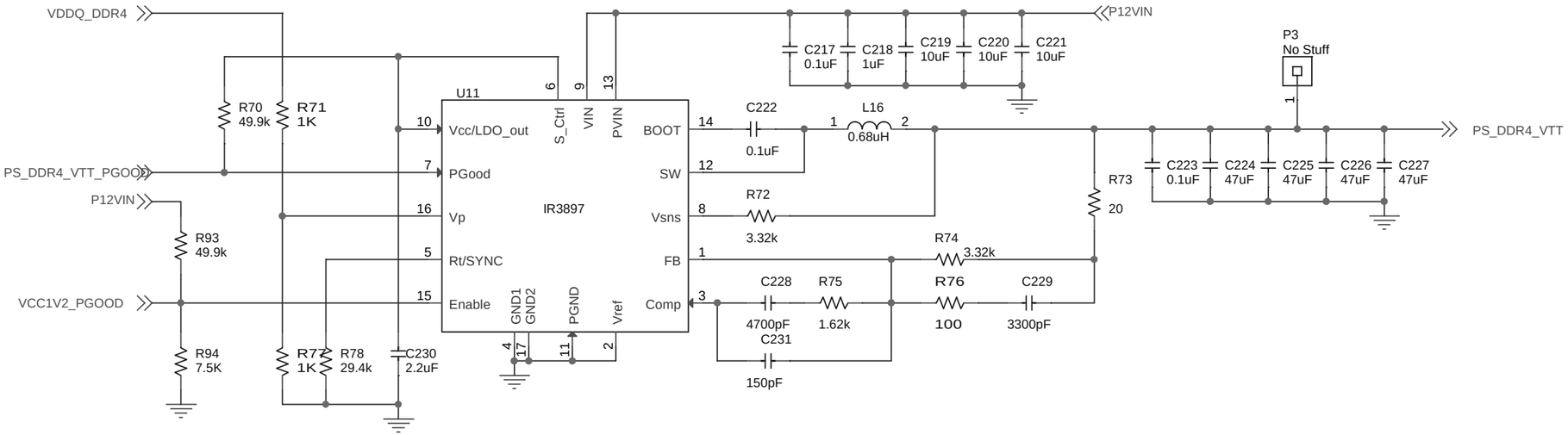

DEMO BOARD			
Title: VERSAL_VM1802_UC1			
Size: B	Document Number: SCH_EV121-C		Rev: E1
Date: Wednesday, April 17, 2019	Sheet 6 of 8		

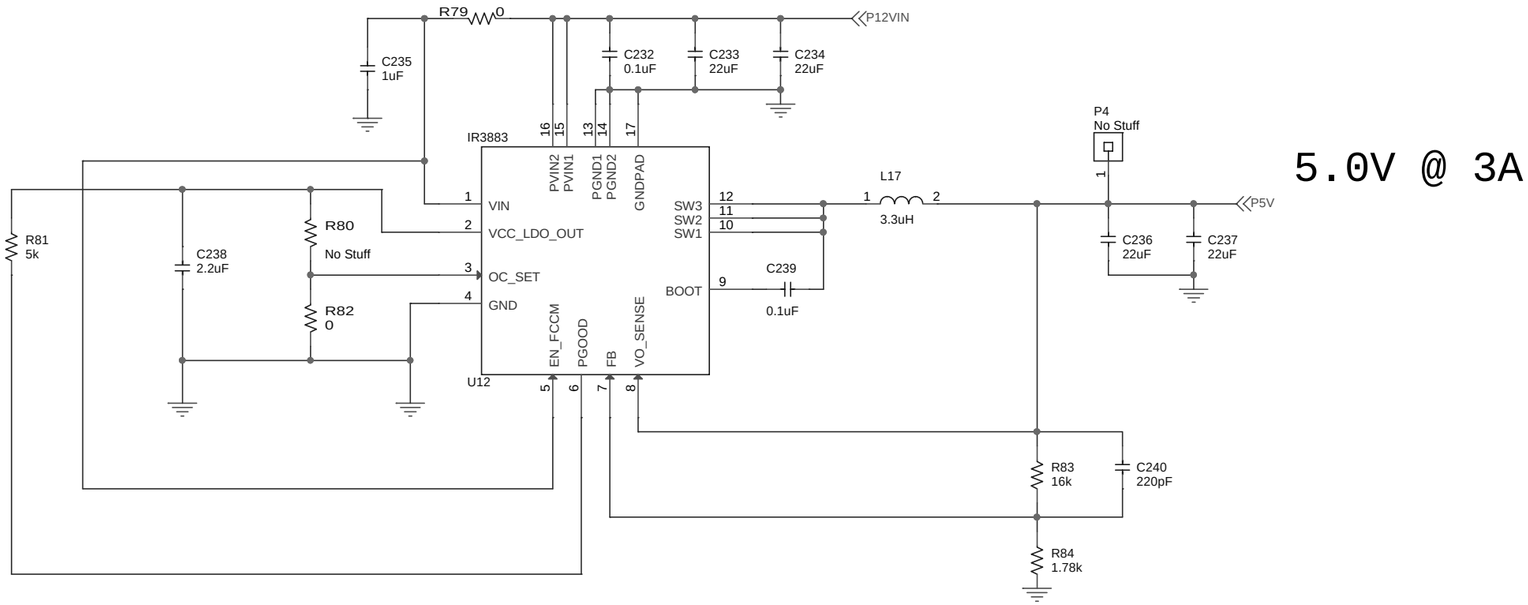

5.0V @ 3A

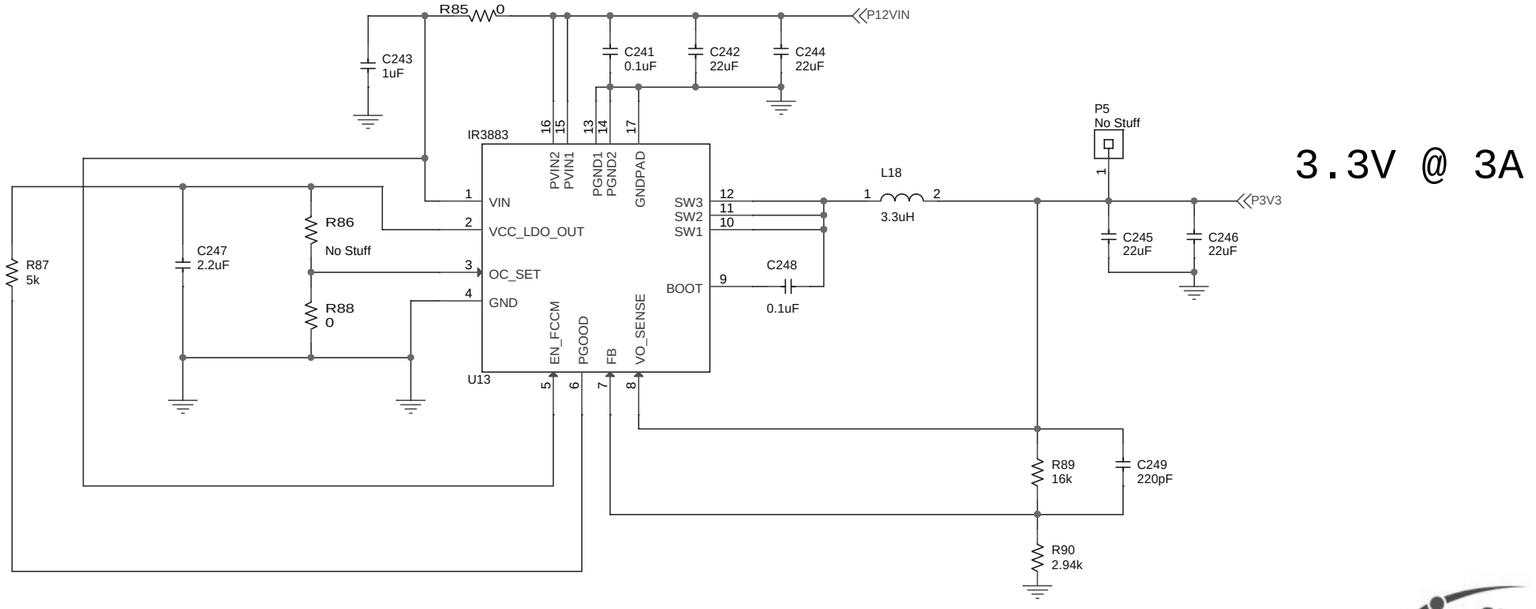

3.3V @ 3A

DEMO BOARD		
Title: VERSAL_VM1802_UC1		
Size: Custom	Document Number: SCH_EV121-C	Rev: E1
Date: Wednesday, April 17, 2019	Sheet 7 of 8	

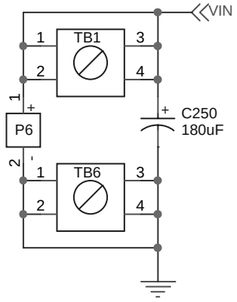

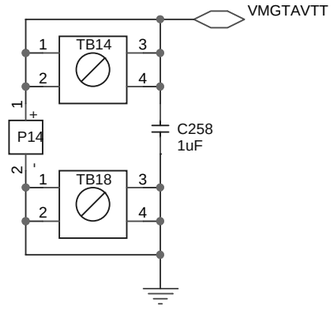

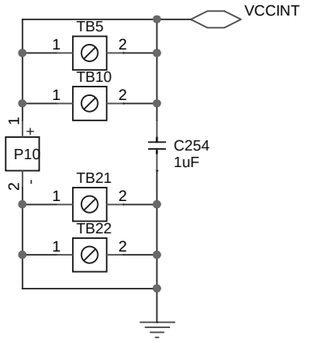

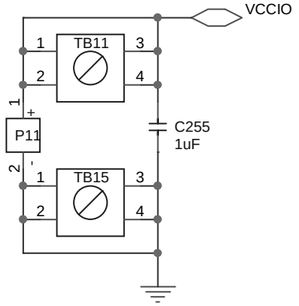

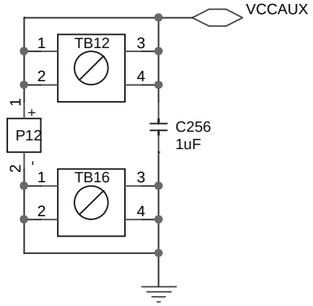

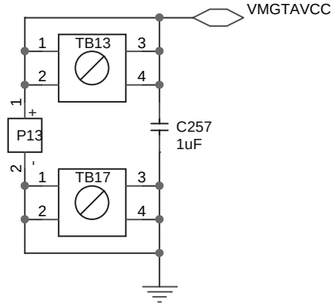

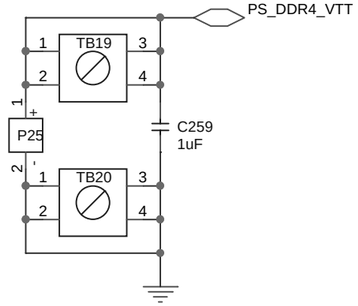

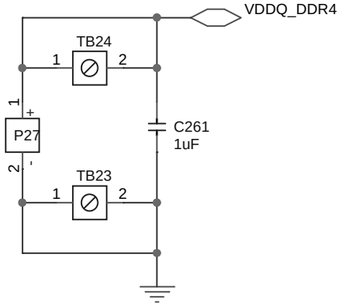

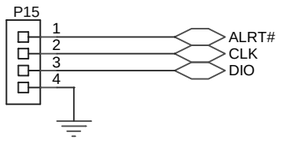

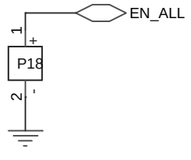

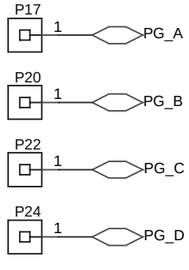

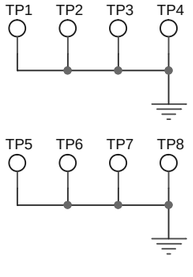

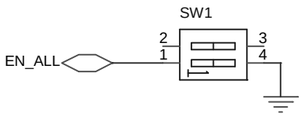

DEMO BOARD		
Title: VERSAL_VM1802_UC1		
Size: B	Document Number: SCH_EV121-C	Rev: E1
Date: Wednesday, April 17, 2019	Sheet 8 of 8	