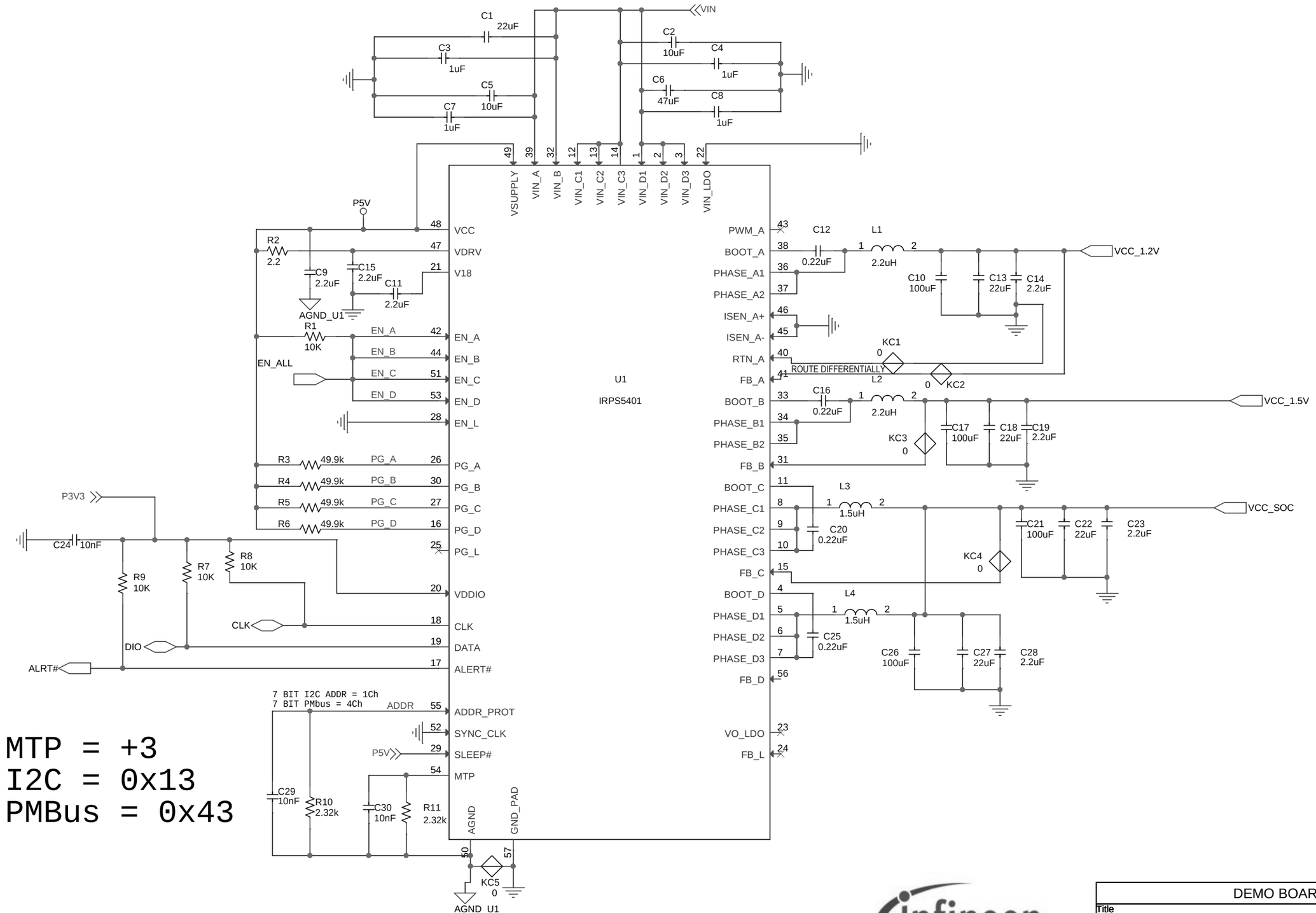

MTP = +3
I2C = 0x13
PMBus = 0x43

DEMO BOARD			
Title: XILINX_VERSAL_VC1902_UC2			
Size: B	Document Number: SCH_EV121-D		Rev: E1
Date: Thursday, April 04, 2019	Sheet 1 of 10		

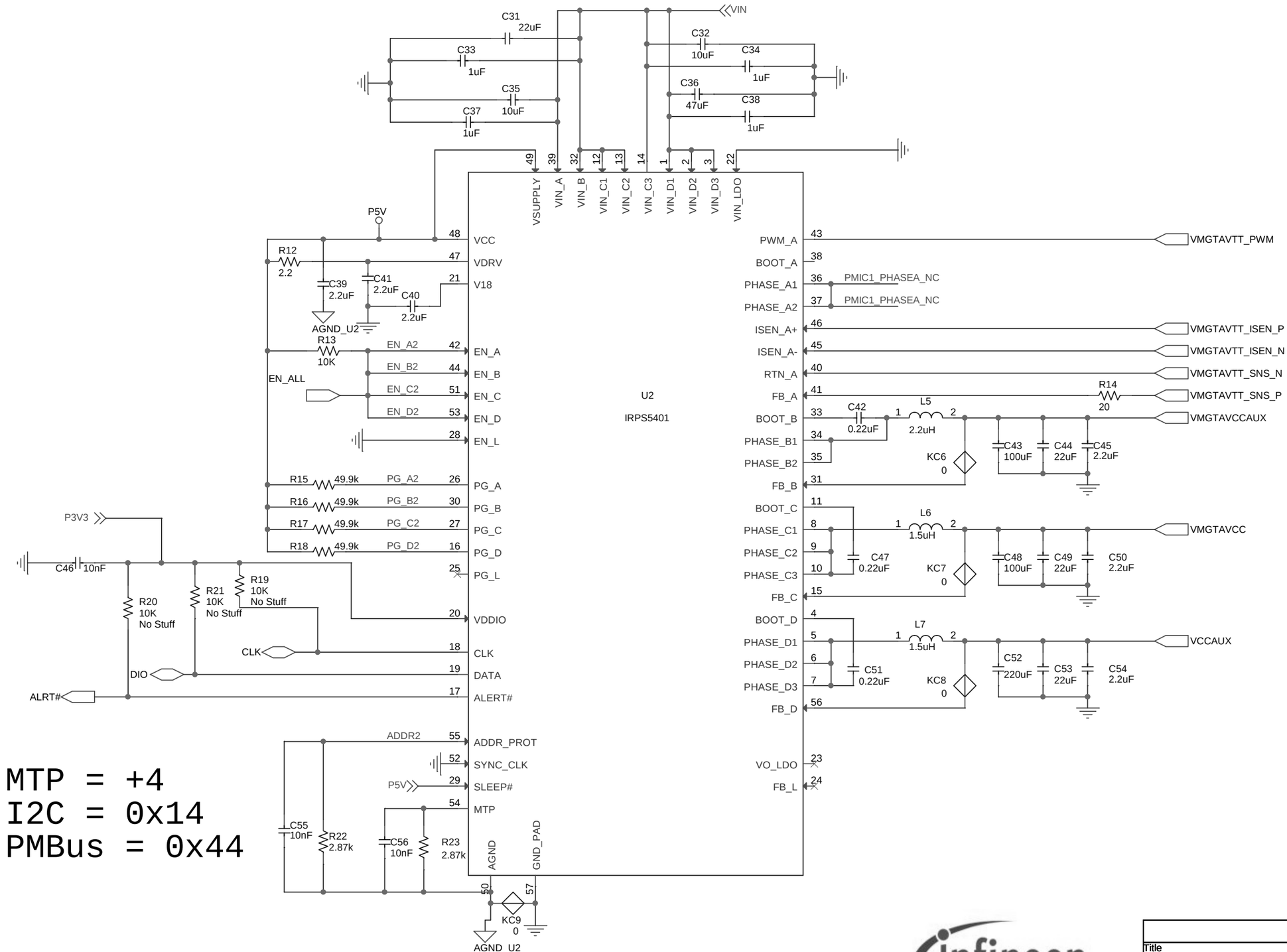

DEMO BOARD		
Title: XILINX_VERSAL_VC1902_UC2		
Size: B	Document Number: SCH_EV121-D	Rev: E1
Date: Thursday, April 04, 2019	Sheet 2 of 10	

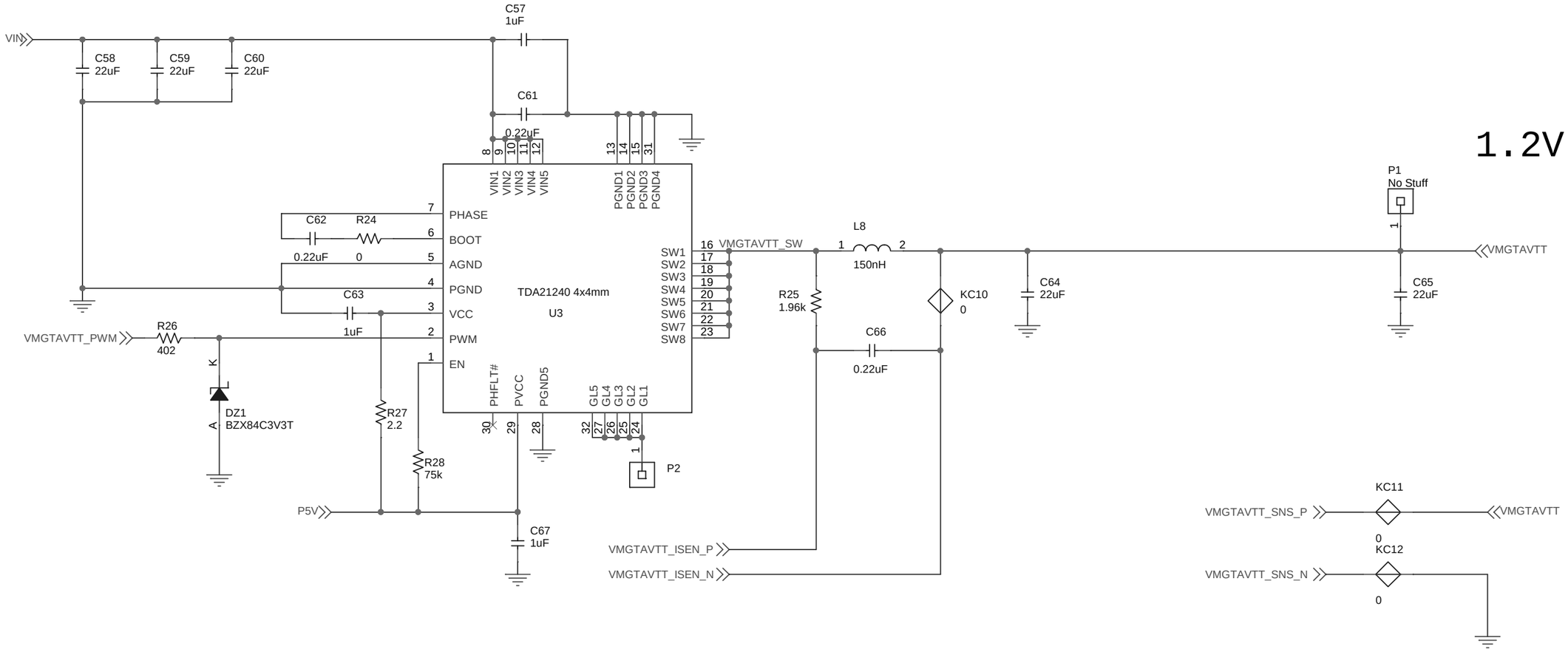

DEMO BOARD		
Title: XILINX_VERSAL_VC1902_UC2		
Size: B	Document Number: SCH_EV121-D	Rev: E1
Date: Friday, April 05, 2019	Sheet 3 of 10	

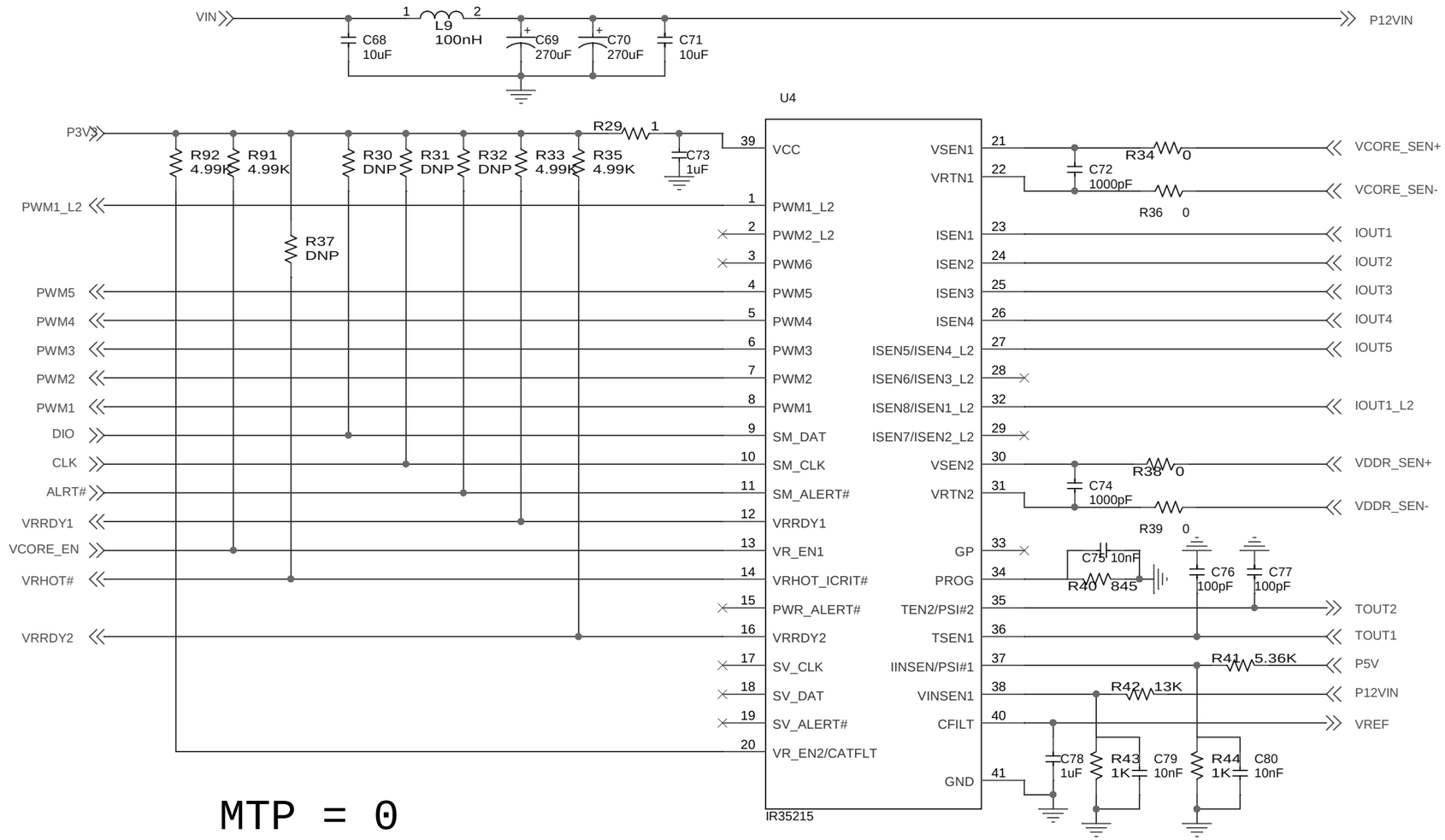

MTP = 0
I2C = 0x10
PMBus = 0x40

DEMO BOARD		
Title: XILINX_VERSAL_VC1902_UC2		
Size: B	Document Number: SCH_EV121-D	Rev: E1
Date: Wednesday, April 03, 2019	Sheet 4 of 10	

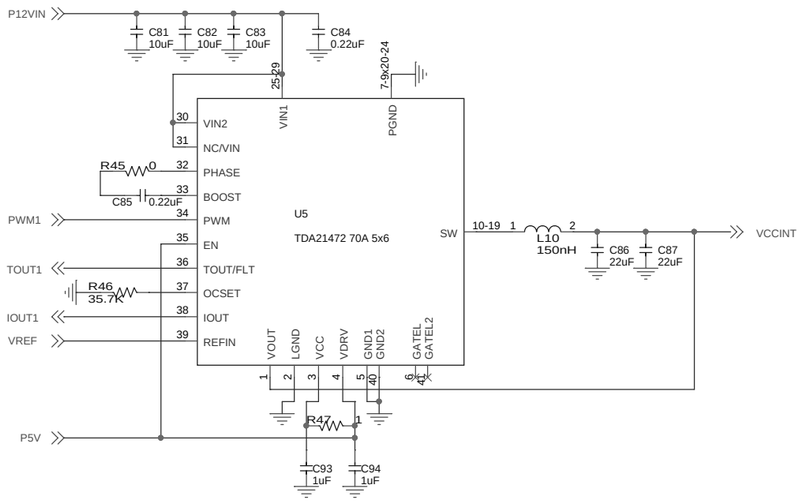

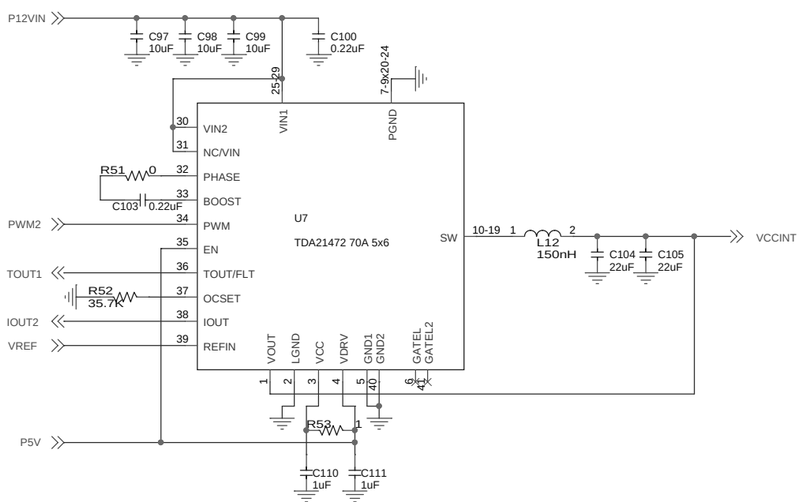

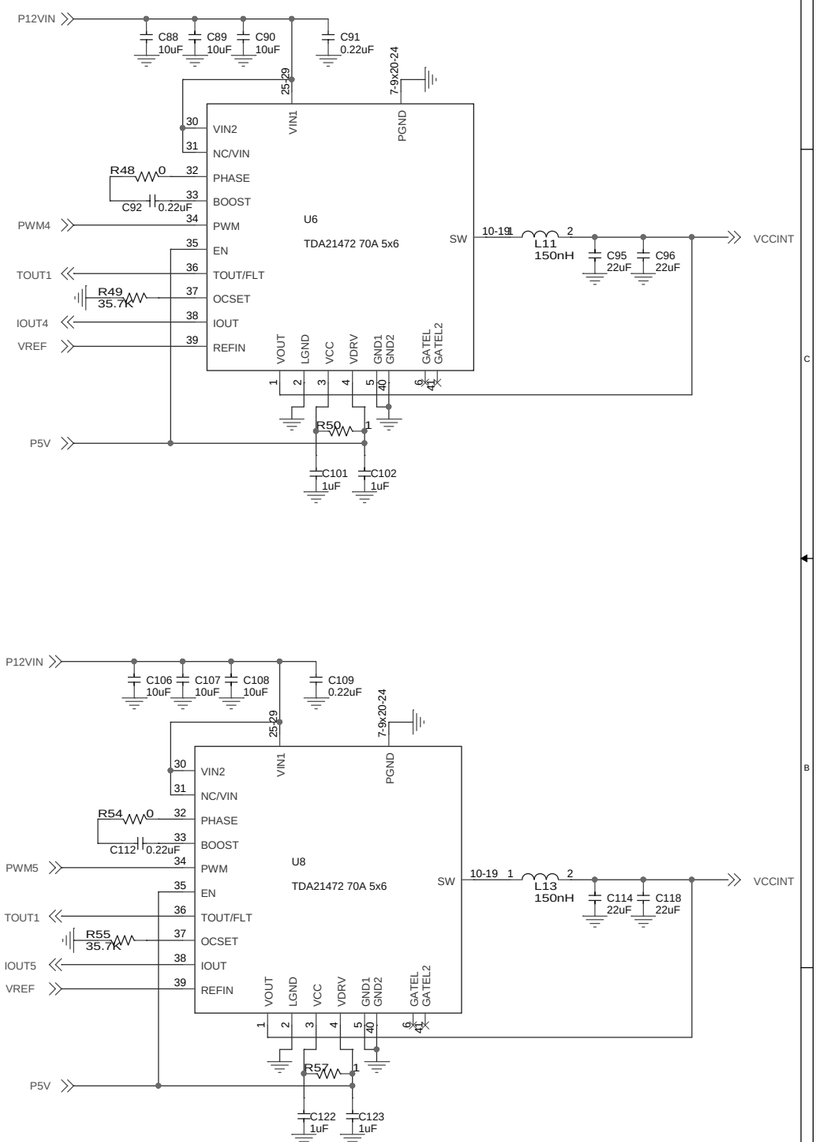



DEMO BOARD			
Title: XILINX_VERSAL_VC1902_UC2			
Size: Custom	Document Number: SCH_EV121-D		Rev: E1
Date: Tuesday, April 02, 2019	Sheet 5 of 10		

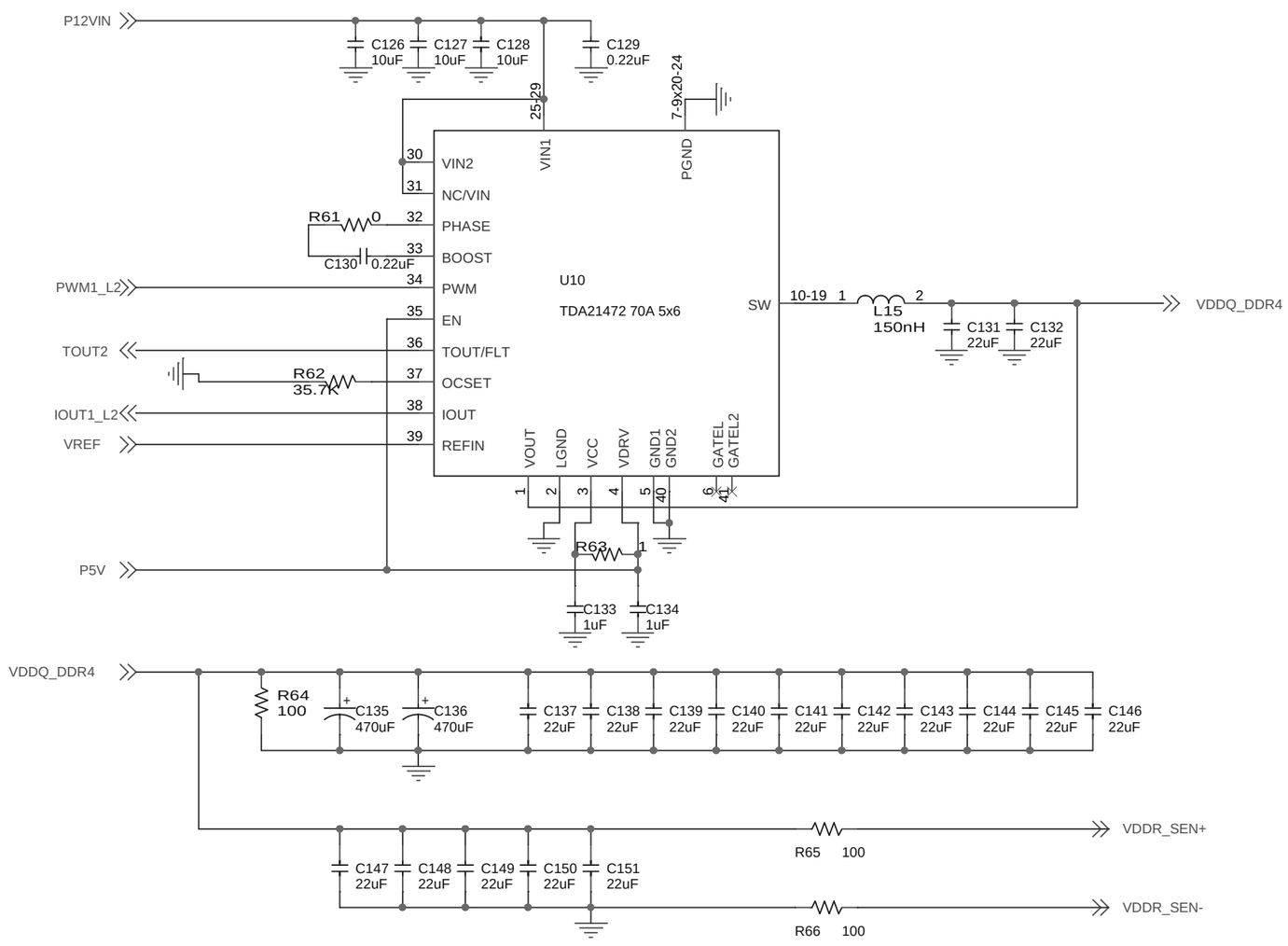

DEMO BOARD		
Title: XILINX_VERSAL_VC1902_UC2		
Size: B	Document Number: SCH_EV121-D	Rev: E1
Date: Friday, April 05, 2019	Sheet 6 of 10	

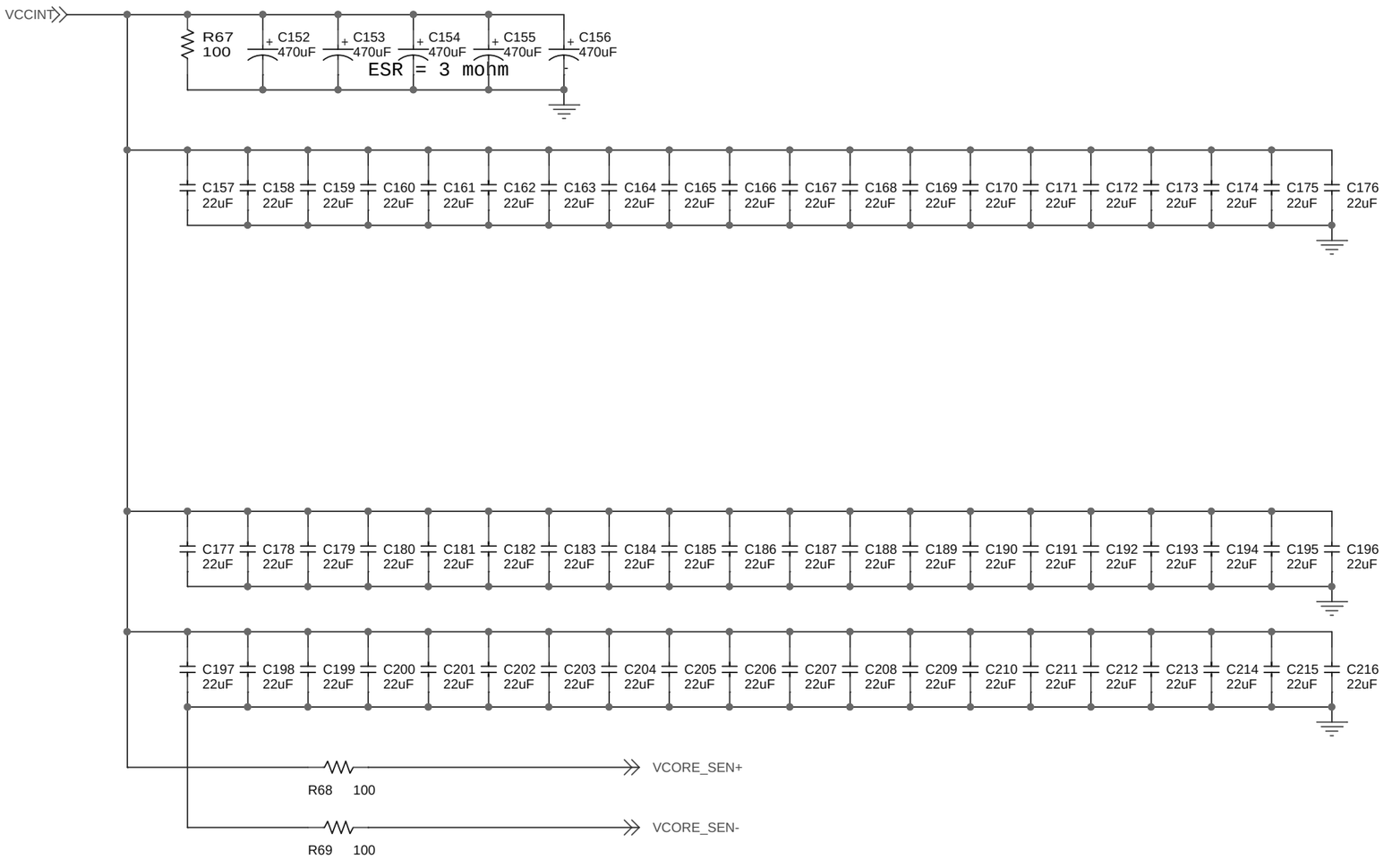

DEMO BOARD		
Title: XILINX_VERSAL_VC1902_UC2		
Size: B	Document Number: SCH_EV121-D	Rev: E1
Date: Friday, April 05, 2019	Sheet 7 of 10	

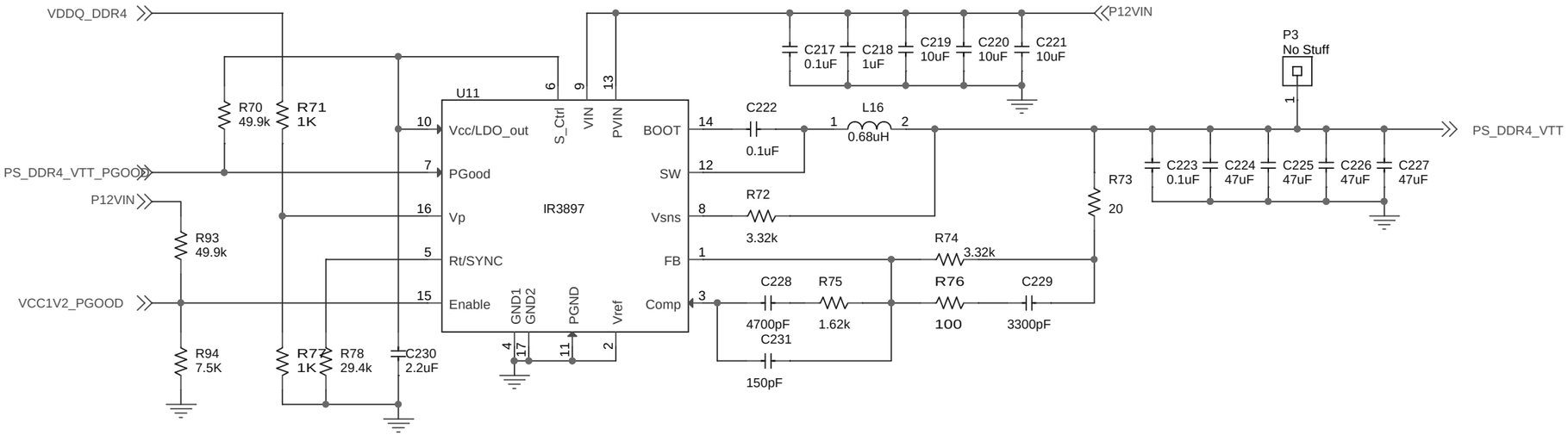

DEMO BOARD

Title: XILINX_VERSAL_VC1902_UC2

Size	Document Number	Rev
B	SCH_EV121-D	E1

Date: Monday, April 01, 2019 Sheet 8 of 10

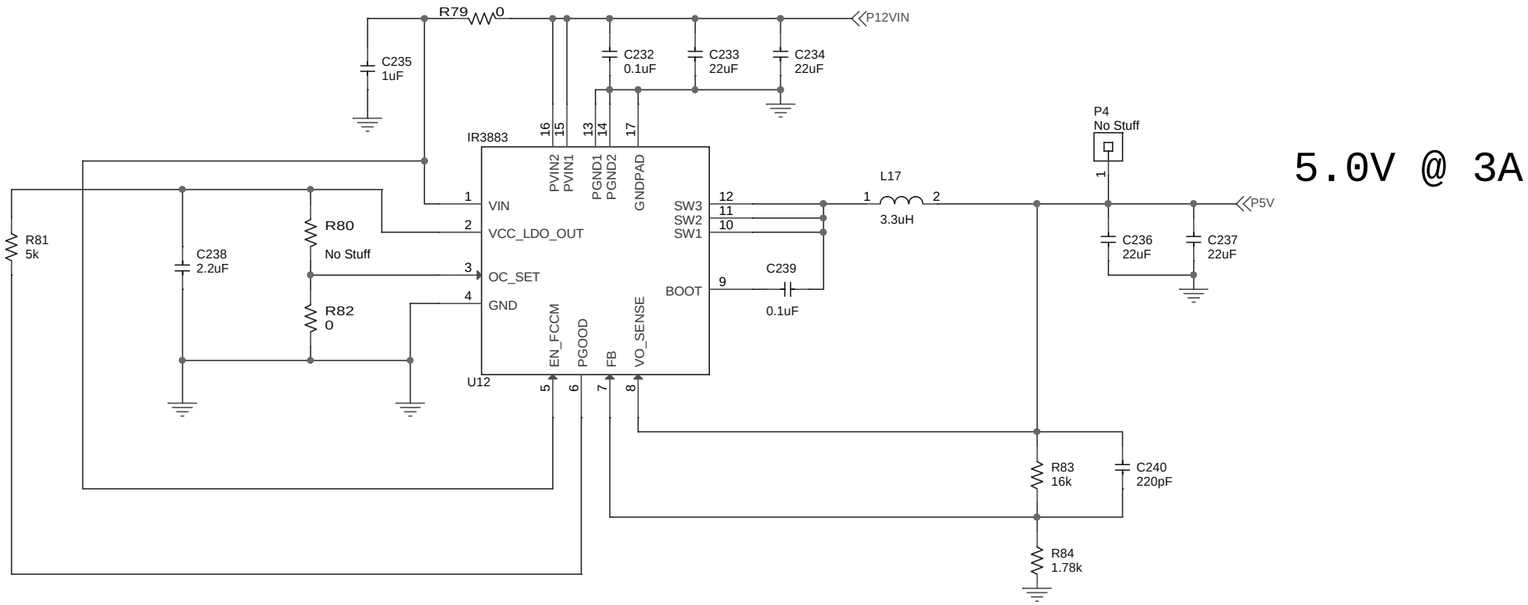

5.0V @ 3A

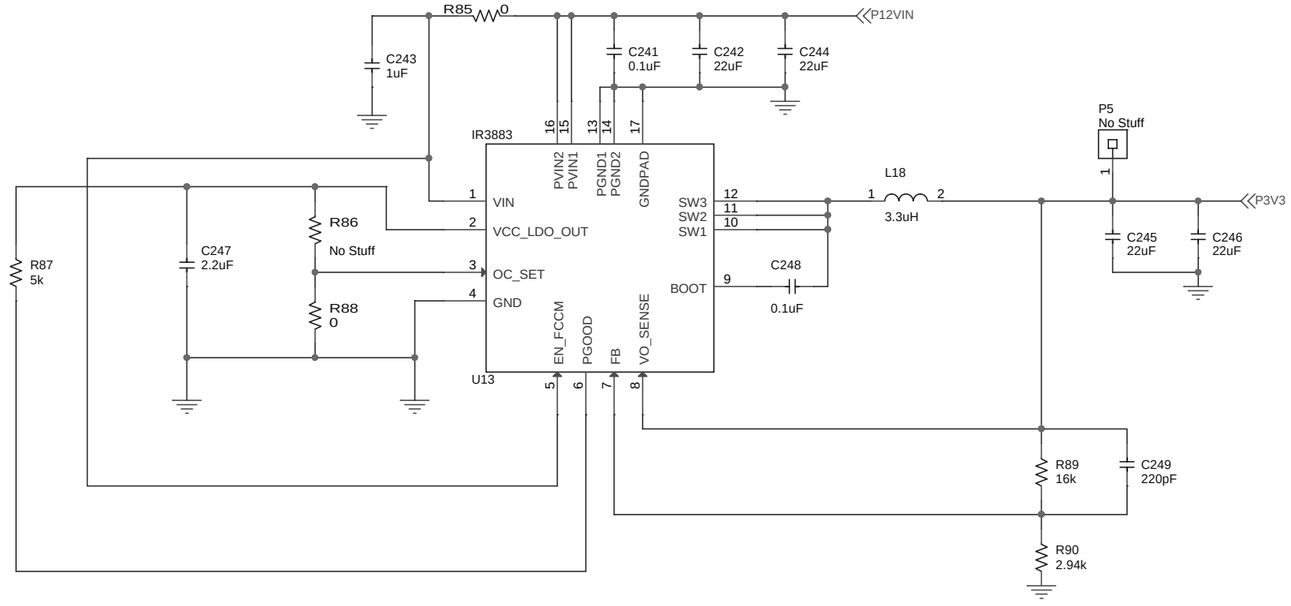

3.3V @ 3A

DEMO BOARD		
Title: XILINX_VERSAL_VC1902_UC2		
Size: Custom	Document Number: SCH_EV121-D	Rev: E1
Date: Monday, April 01, 2019	Sheet 9 of 10	

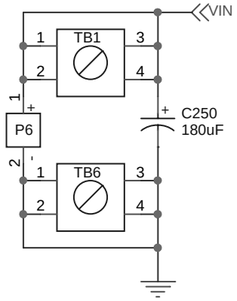

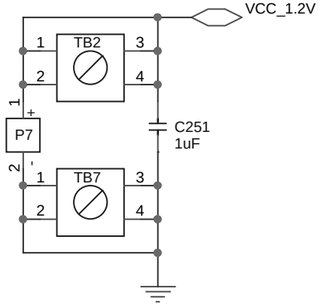

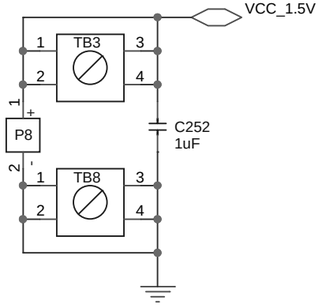

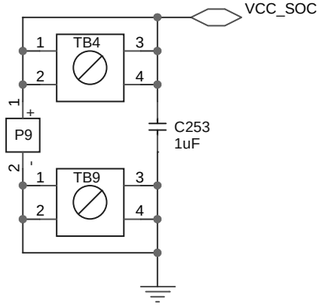

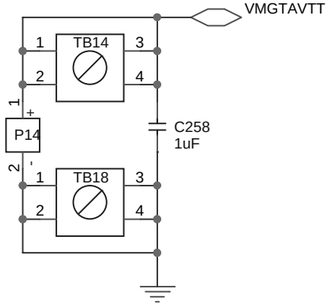

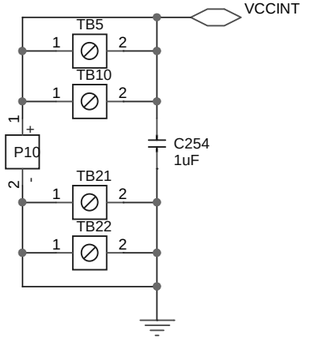

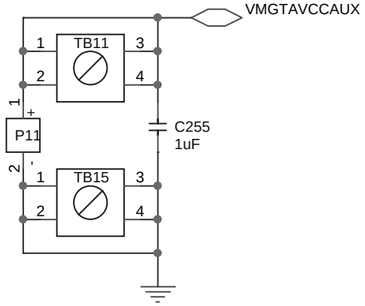

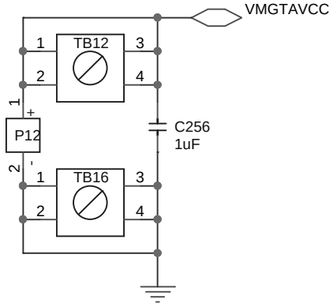

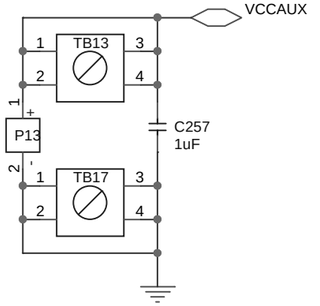

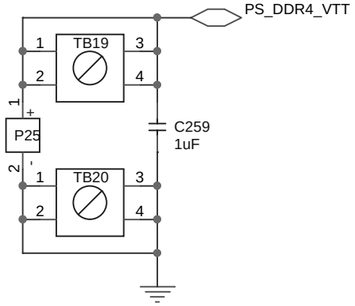

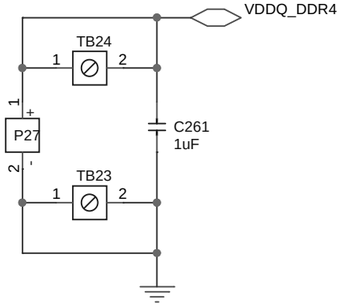

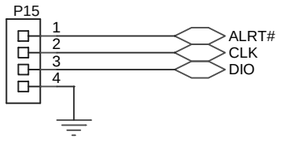

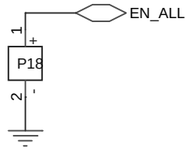

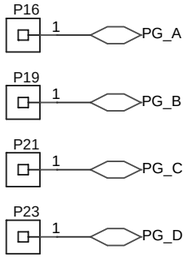

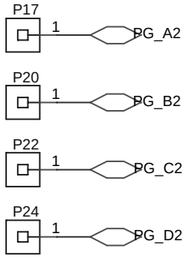

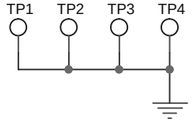

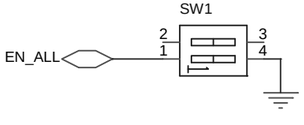

IRPS5401 EVAL BOARD		
Title: ZYNQ 2320 CONFIG 4		
Size: B	Document Number: SCH_EV113-004	Rev: E1
Date: Thursday, April 04, 2019	Sheet 10 of 10	