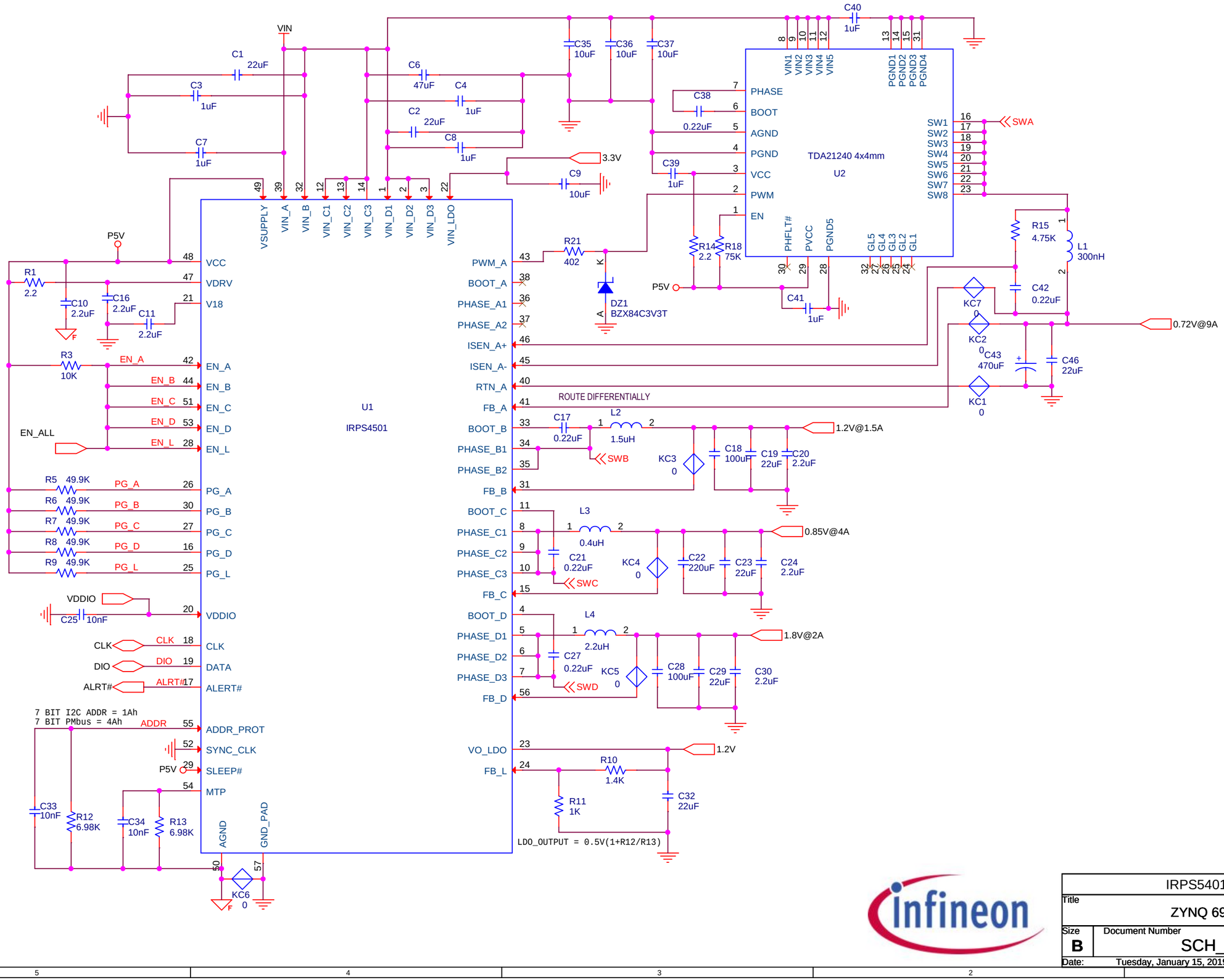

MACRO

IRPS5401 EVAL BOARD		
Title: ZYNQ 6980 CONFIG 11		
Size: B	Document Number: SCH_EV113-011	Rev: E3
Date: Tuesday, January 15, 2019	Sheet 1 of 2	

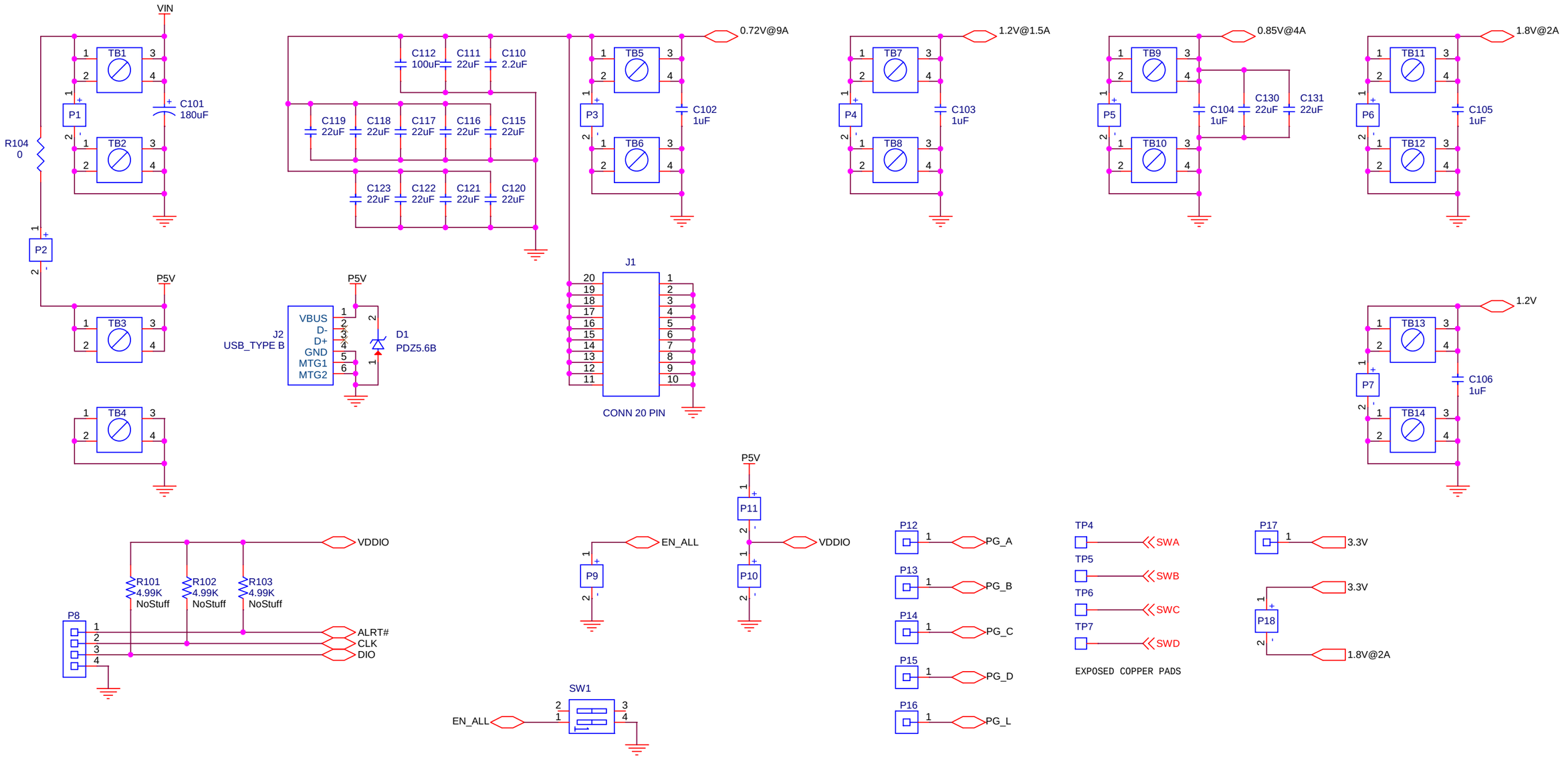

IRPS5401 EVAL BOARD		
Title: ZYNQ 6980 CONFIG 11		
Size: B	Document Number: SCH_EV113-011	Rev: E3
Date: Tuesday, January 15, 2019	Sheet 2 of 2	