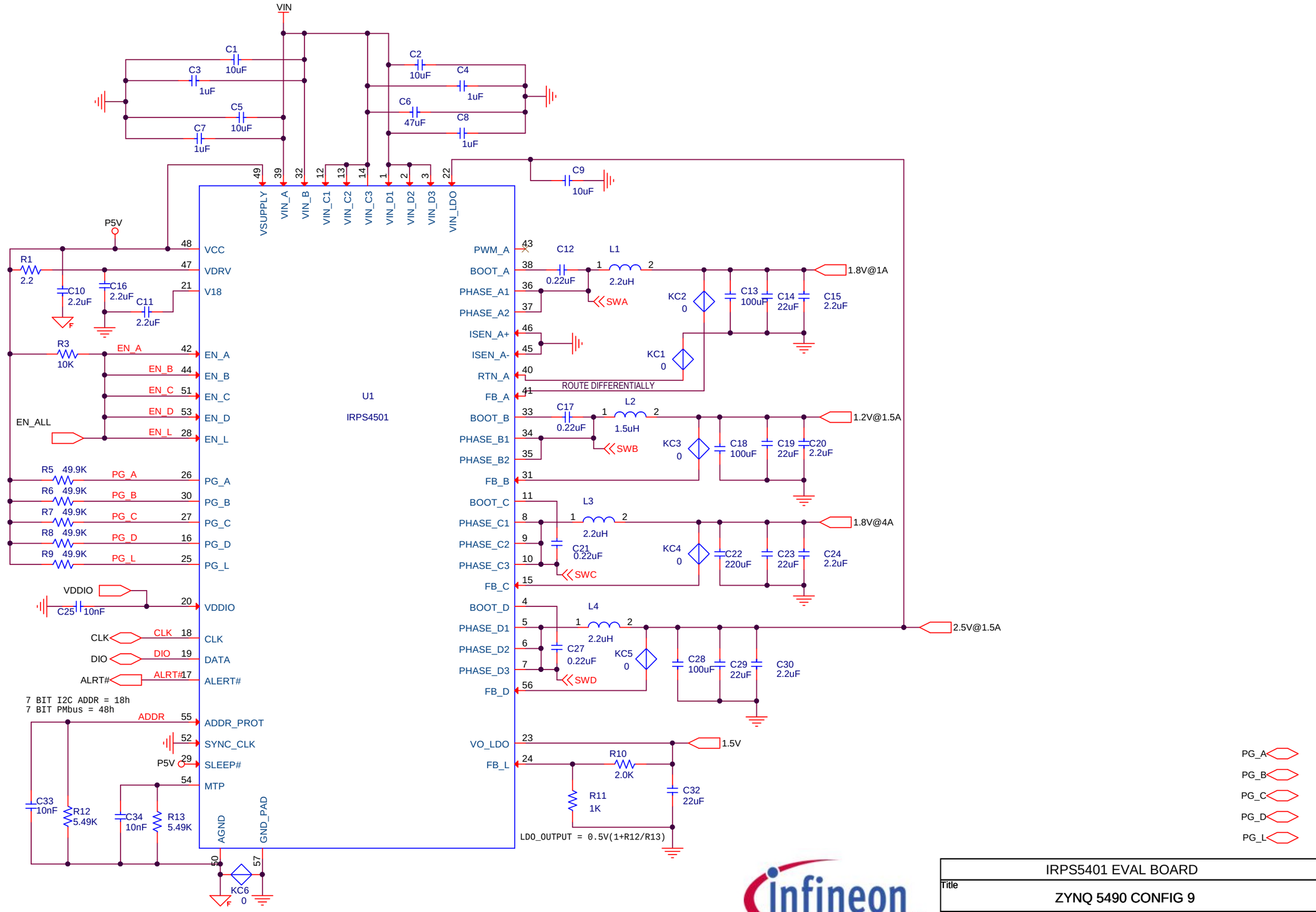

MACRO

IRPS5401 EVAL BOARD		
Title: ZYNQ 5490 CONFIG 9		
Size: B	Document Number: SCH_EV113-009	Rev: E1
Date: Tuesday, August 01, 2017	Sheet 1 of 2	

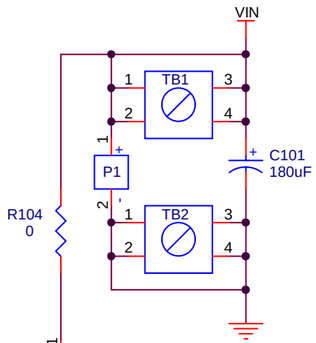

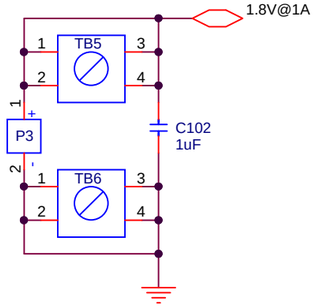

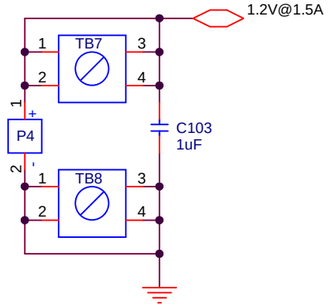

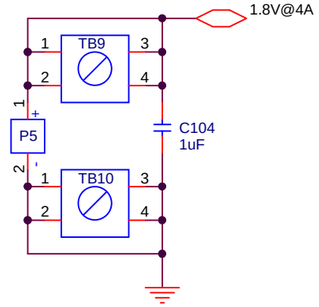

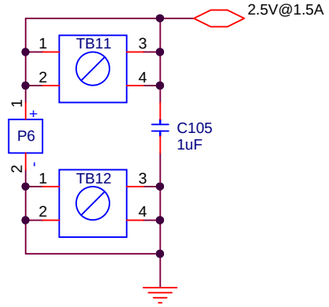



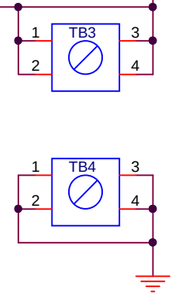

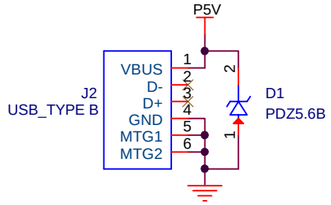

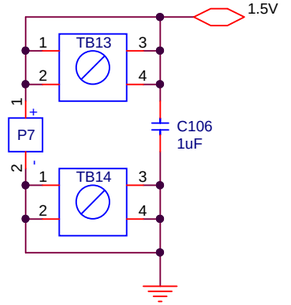

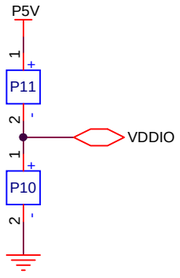

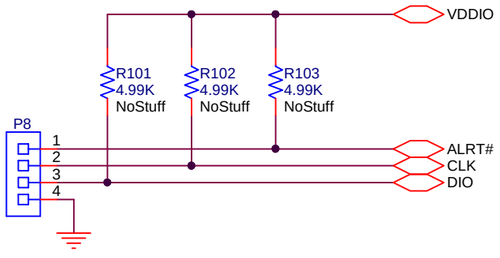

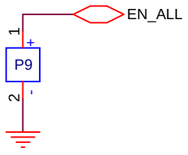

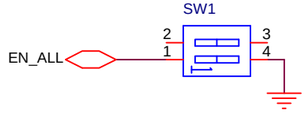

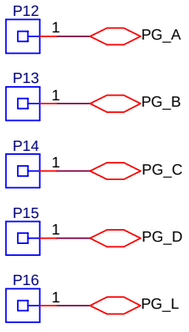

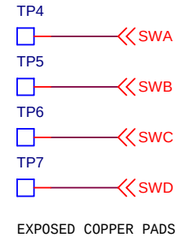

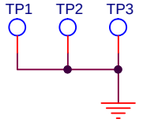

IRPS5401 EVAL BOARD		
Title: ZYNQ 5490 CONFIG 9		
Size: B	Document Number: SCH_EV113-009	Rev: E1
Date: Thursday, July 27, 2017	Sheet 2 of 2	