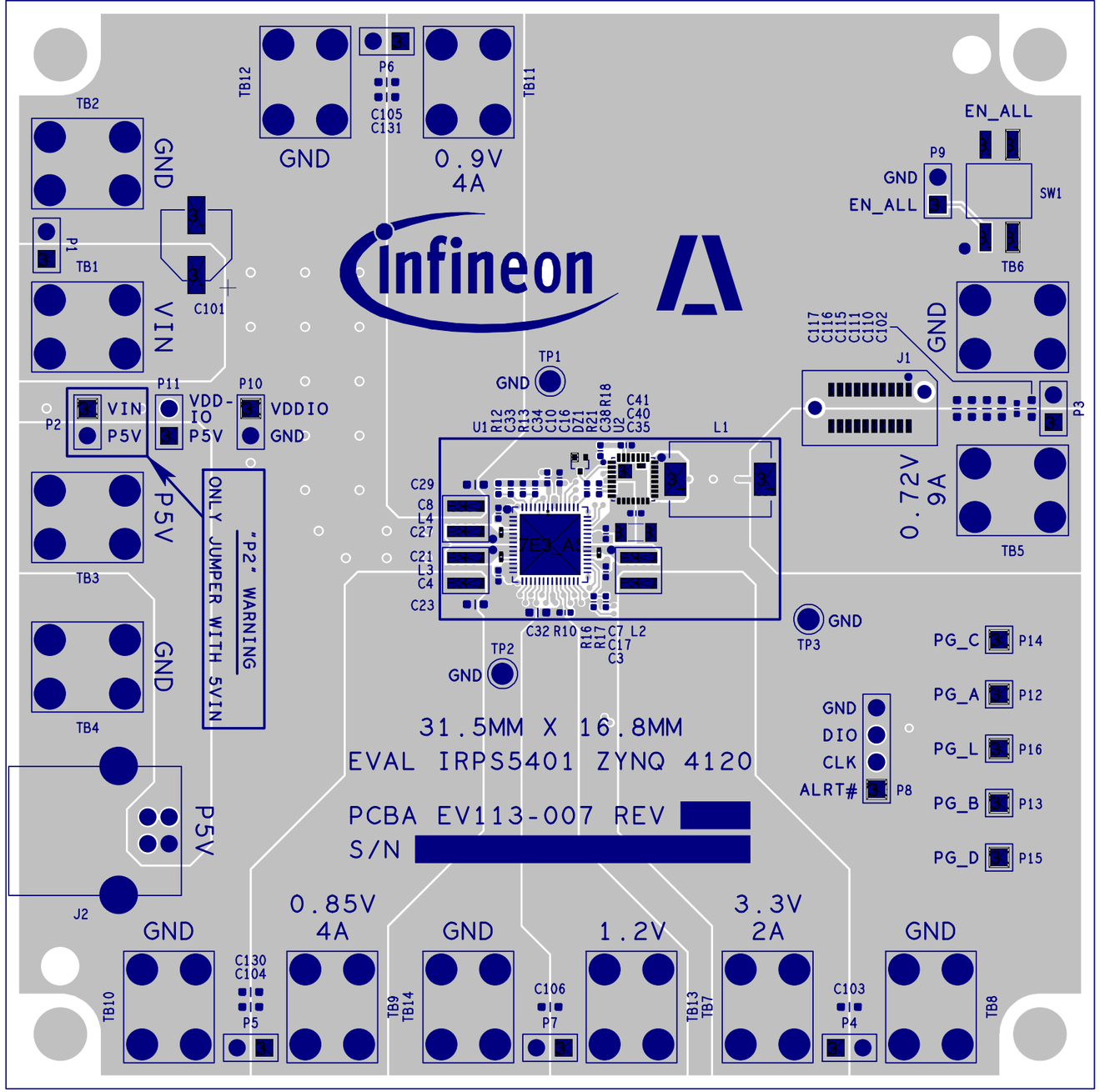

PRIMARY SIDE

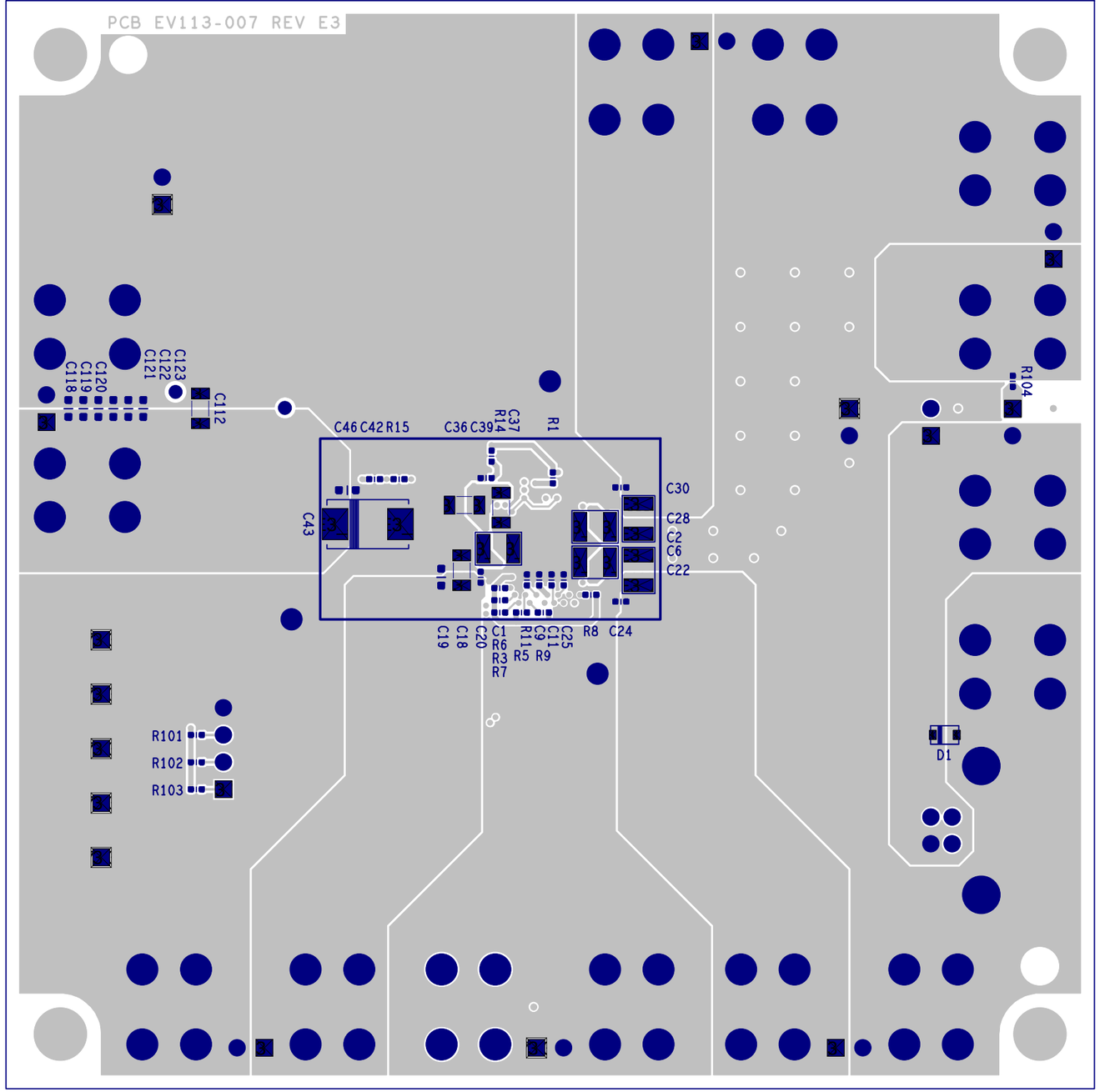

SECONDARY SIDE