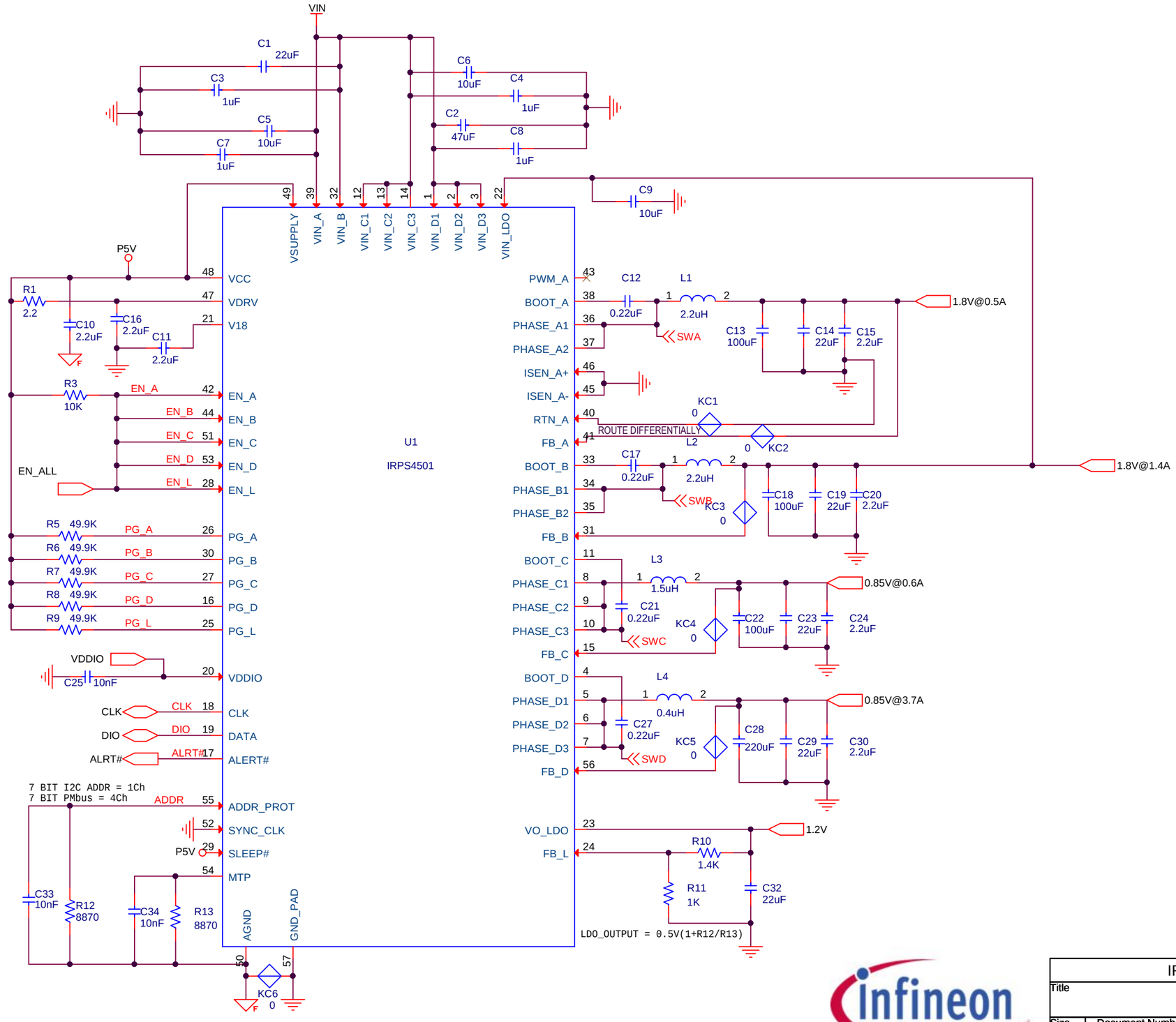


**MACRO**

| | | |
|---|---|---|
| IRPS5401 EVAL BOARD | | |
| Title: ZYNQ 8870 CONFIG 1 | | |
| Size: B | Document Number: SCH_EV113-001 | Rev: E1 |
| Date: Thursday, July 27, 2017 | Sheet 1 of 2 | |

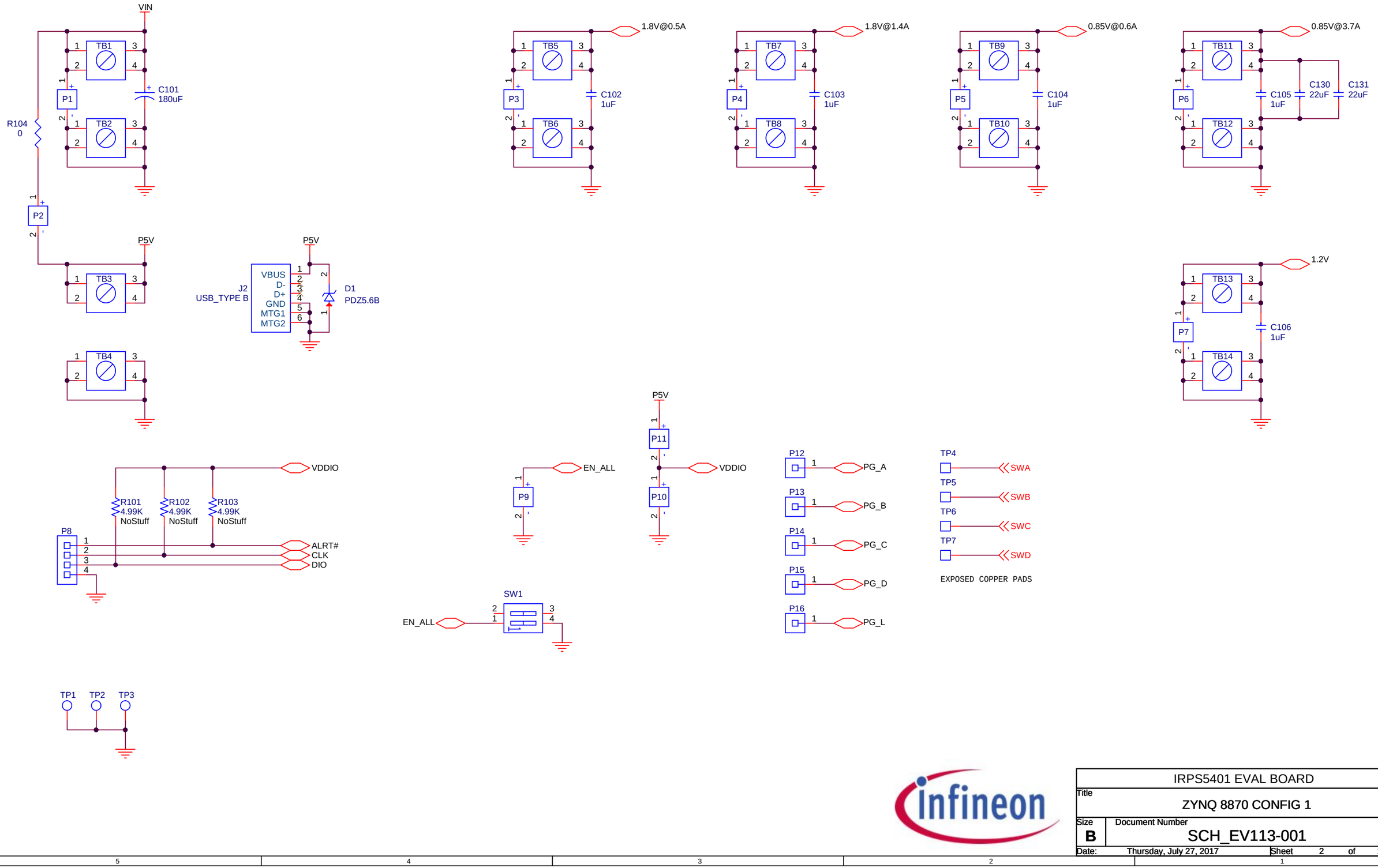


| | | |
|---|---|---|
| IRPS5401 EVAL BOARD | | |
| Title: ZYNQ 8870 CONFIG 1 | | |
| Size: B | Document Number: SCH_EV113-001 | Rev: E1 |
| Date: Thursday, July 27, 2017 | Sheet 2 of 2 | |