CoolSET™ ICE5xRxxxxAG-1 design guide for flyback topology in DSO12 package

About this document

Scope and purpose

This document is a design guide for a fixed-frequency flyback converter using the latest CoolSET™ 5th Generation Fixed-Frequency (FF) Plus ICE5xRxxxxAG-1 switching controller from Infineon, which offers high efficiency, low standby power with selectable entry and exit standby power options, wider V_{CC} operating range with fast startup, and various protection modes such as input line overvoltage protection (LOVP), for a highly reliable system.

Intended audience

This document is intended for power supply design/application engineers, students, etc. who wish to design low-cost and highly reliable systems of offline SMPS, such as auxiliary power supplies for white goods, PCs, servers and TVs, or enclosed adapters for gaming consoles, etc.

CoolSET™

Infineon's CoolSET™ AC-DC integrated power stages in fixed-frequency switching scheme offers increased robustness and outstanding performance. This family offers superior energy efficiency, comprehensive protective features, and reduced system costs and is ideally suited for auxiliary power supply applications in a wide variety of potential applications such as:

- SMPS
- Home appliances
- Server
- Telecom

Table of contents

About this document **1**
Table of contents **2**
1 Introduction **4**
2 Description **5**
2.1 Features 5
2.2 Pin configuration and functionality 5
3 Overview **7**
4 Functional description and component design **8**
4.1 V_{CC} pre-charging and typical V_{CC} voltage during startup 8
4.1.1 V_{CC} capacitor 9
4.2 Soft start 10
4.3 Normal operation 10
4.3.1 PWM operation and peak current mode control 11
4.3.1.1 Switch-on determination 11
4.3.1.2 Switch-off determination 11
4.3.2 Current sensing 12
4.3.3 Frequency reduction 13
4.3.4 Slope compensation 13
4.3.5 Oscillator and frequency jittering 15
4.3.6 Modulated gate drive 15
4.4 Peak current limitation (PCL) 15
4.4.1 Propagation delay compensation 17
4.5 Active Burst Mode (ABM) with selectable power level 18
4.5.1 Entering ABM operation 18
4.5.2 During ABM operation 18
4.5.3 Leaving ABM operation 19
4.5.4 ABM configuration 21
4.6 Non-isolated/isolated configuration 21
4.6.1 Non-isolated FB 22
4.6.2 Isolated FB 23
4.7 Protection functions 24
4.7.1 Line overvoltage 24
4.7.2 V_{CC} OV/UV 24
4.7.3 Overload/open-loop 25
4.7.4 Overtemperature 25
4.7.5 V_{CC} short-to-GND 25
4.7.6 Protection modes 25
5 Schematic **27**
6 PCB layout recommendations **28**
7 5th Generation Fixed-Frequency Plus design example **29**
7.1 Pre-calculation 30
7.2 Input diode bridge (BR1) 31
7.3 Input capacitor (C1) 31
7.4 Transformer design (TR1) 33
7.5 Post calculation 37
7.6 Transformer winding design 38

Table of contents

7.6.1 Primary winding 39
7.6.2 Secondary 1 winding (V_{Out1}) 40
7.6.3 Secondary 2 winding (V_{Out2}) 42
7.7 Clamping network 44
7.8 CS resistor 45
7.9 Output rectifier 45
7.9.1 Output 1 45
7.9.2 Output 2 47
7.10 V_{CC} diode and capacitor 49
7.11 Calculation of losses 50
7.12 CoolSET™/MOSFET temperature 54
7.13 Output regulation (non-isolated) 54
7.14 Line OVP 55
References 56
Design support 57
Revision history 58
Disclaimer 59

1 Introduction

This document is for a fixed-frequency flyback converter using the latest CoolSET™ 5th Generation Fixed-Frequency Plus ICE5xRxxxxAG-1 switching controller.

The frequency reduction with soft gate-driving and frequency-jitter operation offers lower EMI and better efficiency between light and medium loads. The selectable entry and exit level of Active Burst Mode(ABM) enables flexibility and low-power consumption in standby mode with small and controllable output voltage ripple. The product has a wide operating range (10~30.5 V typ.) of IC power supply and lower power consumption. The numerous protection functions including input LOVP give full protection to the power supply system in failure situations. All these features make the ICE5xRxxxxAG-1 an outstanding CoolSET™ switching controller for fixed frequency flyback converter.

The IC is optimized for offline SMPS applications including home appliances, industrial, PC & server, power adapters, smart metering.

2 Description

2.1 Features

- Integrated 700 V/800 V/950 V avalanche rugged CoolMOS™
- Enhanced ABM with selectable entry and exit standby power
- Frequency reduction for better overall system efficiency
- Fast startup, achieved with cascode configuration
- Discontinuous conduction mode (DCM) and continuous conduction mode (CCM) operation with slope compensation
- Frequency jitter and soft gate-driving for low EMI
- Built-in digital soft start
- Cycle-to-cycle peak current limitation (PCL)
- Integrated error amplifier to support direct feedback (FB) in a non-isolated flyback converter
- Comprehensive protection with input line overvoltage (LOVP), V_{CC} overvoltage (OV), V_{CC} undervoltage (UV), overload/open-loop, overtemperature
- All protections are in auto-restart mode
- Limited charging current for V_{CC} short-to-GND
- Pb-free lead plating, halogen-free mold compound, RoHS compliant

2.2 Pin configuration and functionality

The pin configuration is shown in Figure 1 and the functions are described in Table 1.

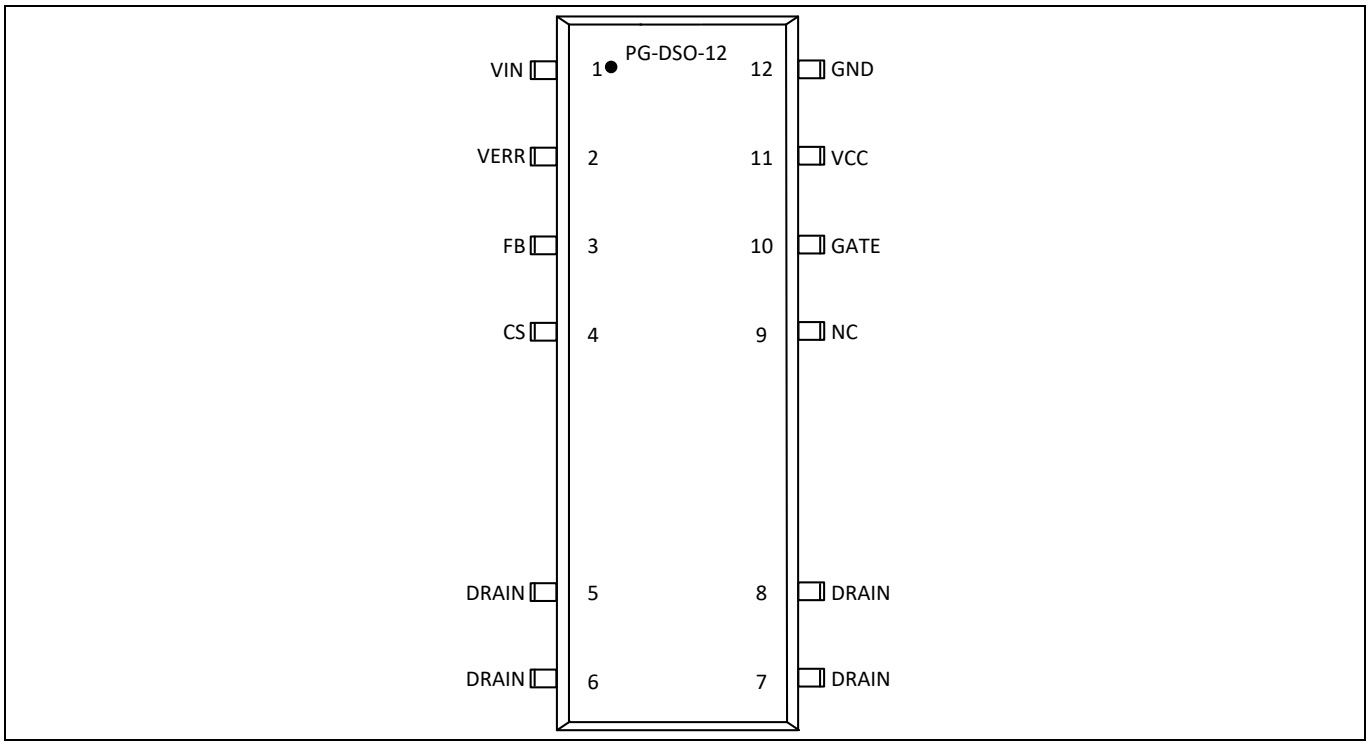

Figure 1 Pin configuration

Description

Table 1 Pin definitions and functions

Pin	Symbol	Function
1	VIN	Input line overvoltage protection (LOVP) VIN pin is connected to the bus via resistor divider to sense the line voltage. Internally, it is connected to the line overvoltage comparator which will stop the switching when LOVP condition occurs. To disable LOVP, connect this pin to GND
2	VERR	Error amplifier VERR pin is internally connected to the transconductance error amplifier for non-isolated flyback application. Connect this pin to GND for isolated flyback application
3	FB	Feedback and ABM entry/exit control FB pin combines the functions of feedback control, selectable burst entry/exit control, and overload/open loop protection
4	CS	Current sense The CS pin is connected to the shunt resistor for the primary current sensing externally and to the PWM signal generator block for switch-off determination (together with the feedback voltage) internally. Moreover, CS short to ground protection is sensed via this pin
5, 6, 7, 8	DRAIN	DRAIN (Drain of integrated CoolMOS™) The DRAIN pin is connected to the drain of the integrated CoolMOS™
9	NC	No connection
10	GATE	Gate driver output The GATE pin is connected to the Gate of the power MOSFET and additionally; a pull-up resistor is connected from bus voltage to turn on the power MOSFET for charging up the V_{CC} capacitor during startup
11	VCC	V_{CC} (Positive voltage supply) The V_{CC} pin is the positive voltage supply to the IC. The operating range is between V_{VCC_OFF} and V_{VCC_OVP}
12	GND	Ground The GND pin is the common ground of the controller

3 Overview

Figure 2 shows the typical application of ICE5xRxxxxAG-1 switching controller in an isolated fixed-frequency flyback converter using TL431 IC and an optocoupler.

Figure 3 shows the typical application of ICE5xRxxxxAG-1 switching controller in a non-isolated fixed-frequency flyback converter using an integrated error amplifier.

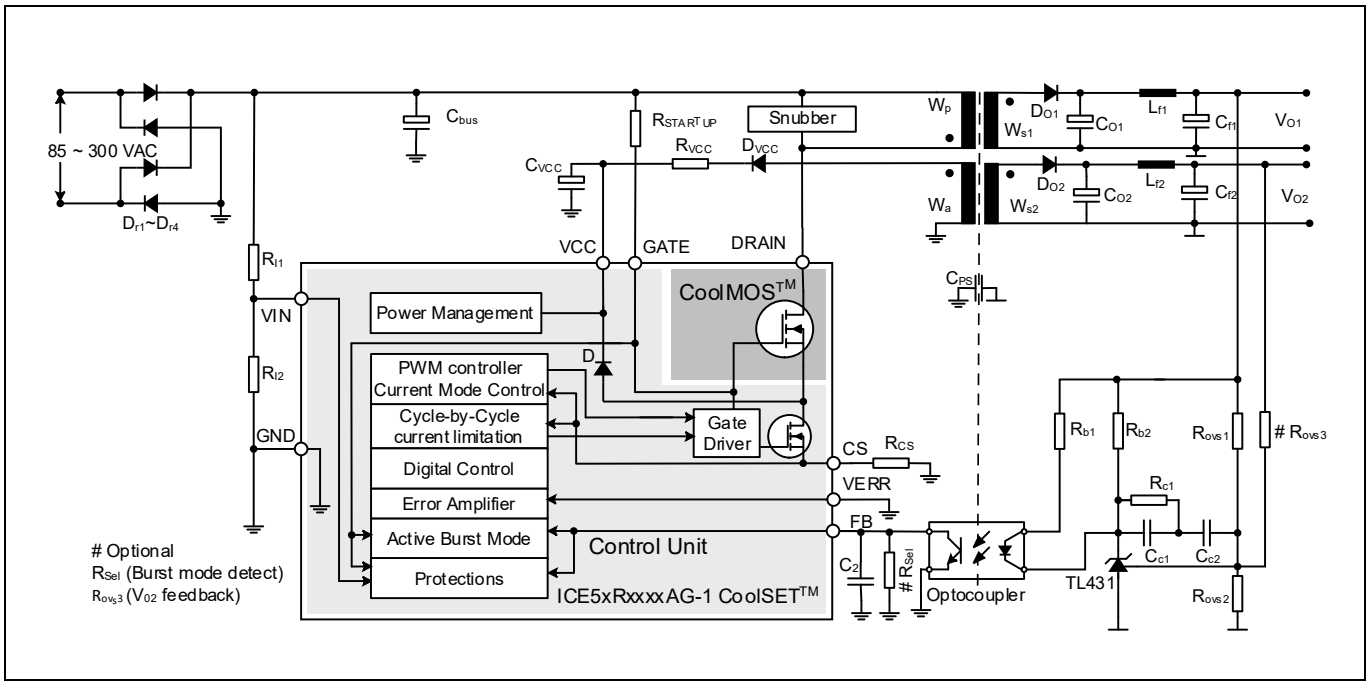

Figure 2 Typical application in an isolated fixed-frequency flyback converter using TL431 IC and an optocoupler

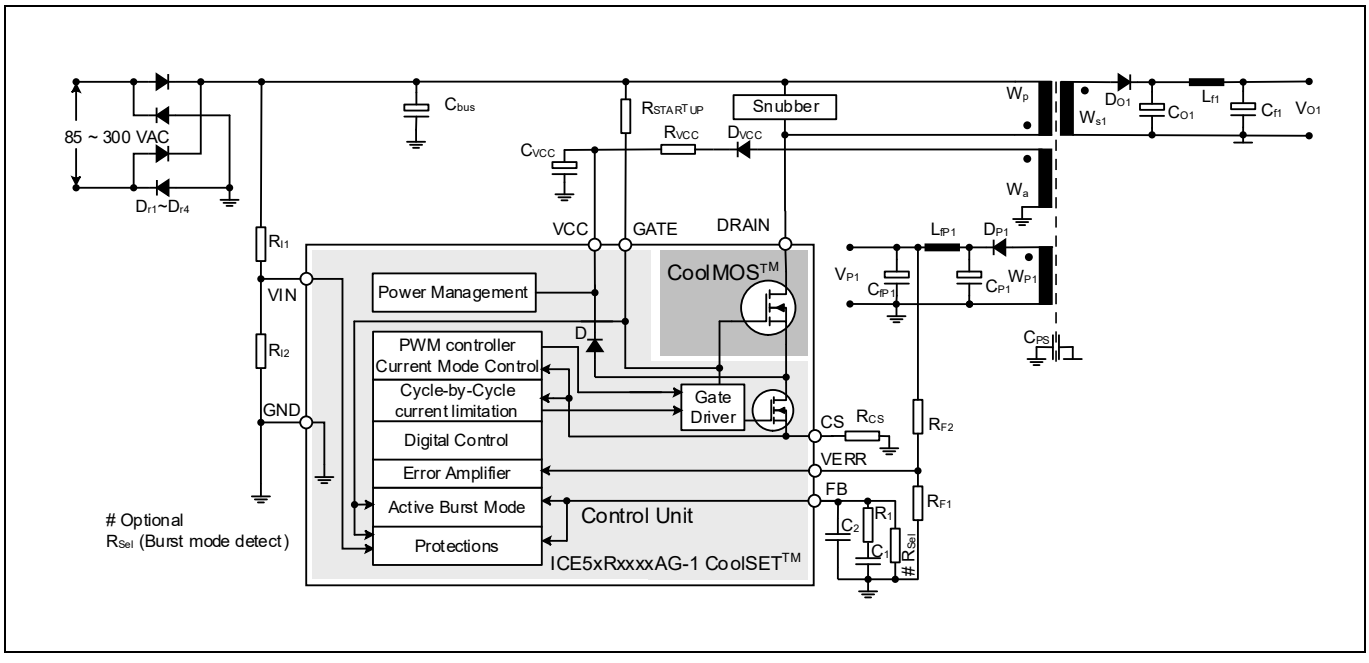

Figure 3 Typical application in a non-isolated flyback converter using an integrated error amplifier

4 Functional description and component design

4.1 V_{CC} pre-charging and typical V_{CC} voltage during startup

When AC line input voltage is applied, a rectified voltage appears across the capacitor (C_{bus}) (see Figure 2 and Figure 3). The pull-up resistor ($R_{StartUp}$) provides a current to charge the input capacitance (C_{iss}) of the power MOSFET, generating one voltage level. If the voltage across input capacitance (C_{iss}) is sufficiently high, the power MOSFET will turn on and the V_{CC} capacitor will be charged through primary inductance of the transformer (L_P), the power MOSFET, and the internal diode with two steps of constant current source ($I_{VCC_Charge1}$[1] and $I_{VCC_Charge3}$[1]).

A very small constant current source ($I_{VCC_Charge1}$) charges the V_{CC} capacitor until V_{CC} reaches V_{VCC_SCP} to protect the controller from a V_{CC} pin short-to-GND during startup. After this, the second step constant current source ($I_{VCC_Charge3}$) is provided to further charge the V_{CC} capacitor, until V_{CC} exceeds the turn-on threshold V_{VCC_ON}. As shown in Phase I in Figure 4, the V_{CC} voltage increases linearly, with two steps.

Note: The recommended typical value for $R_{StartUp}$ is 50 MΩ (20 MΩ~100 MΩ). Lower values of $R_{STARTUP}$ will have a relatively higher standby power, especially at high input voltage.

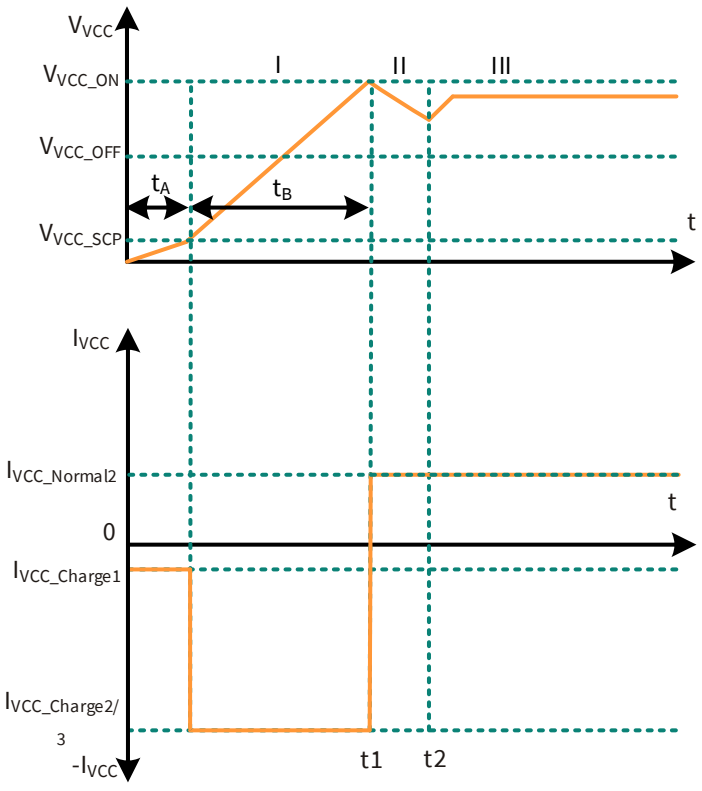

Figure 4 V_{CC} voltage and current at startup

The time taken for the V_{CC} pre-charging can be calculated as follows:

[1] $I_{VCC_Charge1/2/3}$ is charging current from the controller to the V_{CC} capacitor during startup.

$$t_{\mathrm{StartUp}} = t_{\mathrm{A}} + t_{\mathrm{B}} = \frac{V_{VCC_SCP} \times C_{VCC}}{I_{VCC_Charge1}} + \frac{(V_{VCC_ON} - V_{VCC_SCP}) \times C_{VCC}}{I_{VCC_Charge3}}$$

Equation 1 Time for V_{cc} pre-charging

Where,

- V_{VCC_SCP} = V_{CC} short-circuit protection voltage
- C_{VCC} = V_{CC} capacitor
- V_{VCC_ON} = V_{CC} turn-on threshold voltage
- $I_{VCC_Charge1}$ = V_{CC} charge current 1
- $I_{VCC_Charge3}$ = V_{CC} charge current 3

When the V_{CC} voltage exceeds the V_{VCC_ON} at time t_1, the IC begins to operate with a soft start. Because of power consumption of the IC and the fact that there is still no energy from the auxiliary winding to charge the V_{CC} capacitor before the output voltage is built up, the V_{CC} voltage drops (Phase II). After the output voltage rises close to regulation, the auxiliary winding starts to charge the V_{CC} capacitor from the time t_2 onwards, delivering the power to the IC. The V_{CC} will then reach a constant value depending on the output load.

4.1.1 V_{CC} capacitor

As there is a V_{CC} UV protection, select the V_{CC} capacitor to be large enough to ensure that enough energy is stored in the V_{CC} capacitor so that the V_{CC} voltage will not drop below the V_{CC} UV protection threshold V_{VCC_OFF} before the auxiliary power kicks in. Therefore, the minimum capacitance should be as follows:

$$C_{VCC} > \frac{I_{VCC_normal2} \times t_{ss}}{V_{VCC_ON} - V_{VCC_OFF}}$$

Equation 2 Minimum capacitance

Where,

- C_{VCC} = V_{CC} capacitor
- $I_{VCC_normal2}$ = V_{CC} supply current with active gate
- t_{ss} = Soft start time

During ABM condition where the auxiliary winding cannot provide enough power to supply the IC because of the burst switching, the V_{CC} voltage may drop below the V_{VCC_OFF}. Therefore, increase the capacitance, as the calculation above may not be enough.

4.2 Soft start

After the supply voltage of the IC exceeds V_{VCC_ON}, which corresponds to t_1 of Figure 4, the IC starts switching with a soft start. The soft start implemented is a digital time-based function. The preset soft start time is t_{SS} (12 ms) with four steps (see Figure 5). If not limited by other functions, the peak voltage on the CS pin will increase incrementally from V_{SS1} to V_{CS_N}. The normal FB loop will take over the control when the output voltage reaches its regulated value.

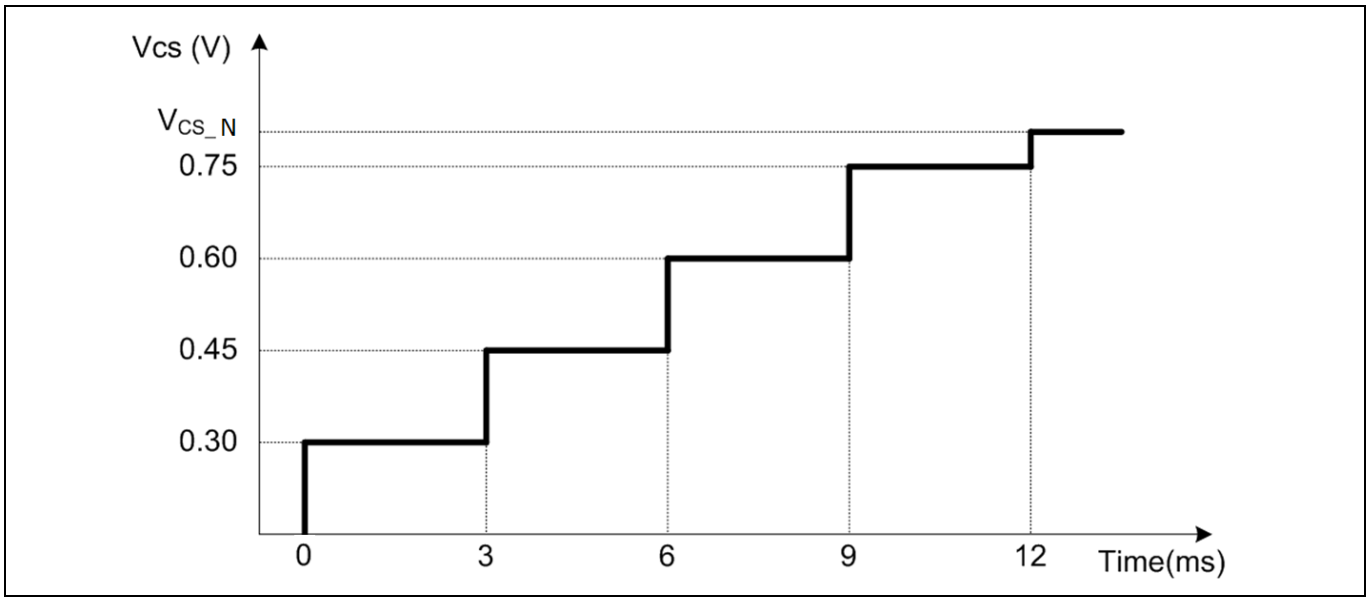

Figure 5 Maximum CS voltage during soft start

4.3 Normal operation

During normal operation, the PWM controller consists of the following:

- Digital signal processing circuit
- Regulation control
- Analog circuit
- Current measurement unit
- Comparator

Details of normal operation are described in the following sections.

4.3.1 PWM operation and peak current mode control

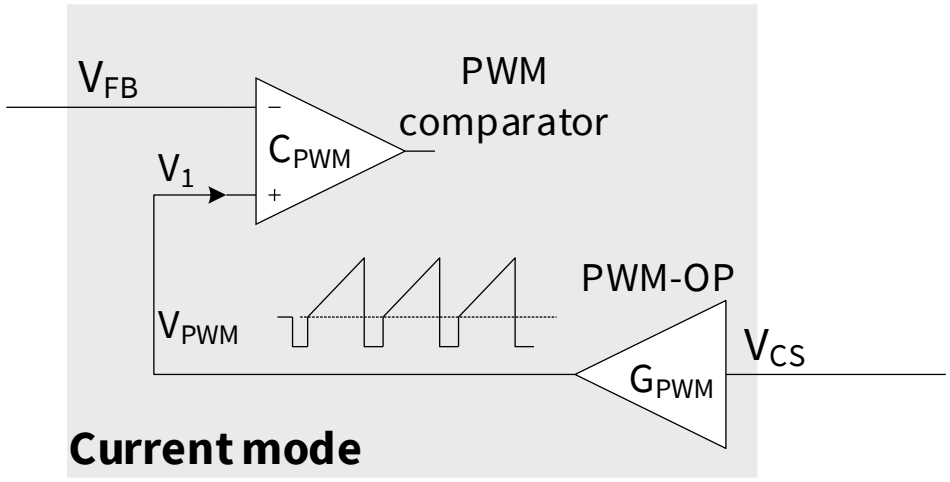

Figure 6 Pulse width modulation block

4.3.1.1 Switch-on determination

The power MOSFET turn-on is synchronized with an internal oscillator, with a switching frequency F_{SW} that corresponds to the voltage level V_{FB} (see Figure 8).

4.3.1.2 Switch-off determination

In peak current mode control, the PWM comparator monitors voltage V_1 (see Figure 6) that represents the instantaneous current of the power MOSFET. When V_1 exceeds V_{FB}, the PWM comparator sends a signal to switch off the gate of the power MOSFET. Therefore, the peak current of the power MOSFET is controlled by the FB voltage V_{FB} (see Figure 7).

At switch-on transient of the power MOSFET, a voltage spike across R_{CS} can cause V_1 to increase and exceed V_{FB}. To avoid a false switch-off, the IC has a blanking time t_{CS_LEB} before detecting the voltage across R_{CS} to mask the voltage spike. Therefore, the minimum turn-on time of the power MOSFET is t_{CS_LEB}.

If the voltage level at V_1 takes a long time to exceed V_{FB}, the IC will implement a maximum duty cycle control to force the power MOSFET to switch off when $D_{MAX} = 0.75$.

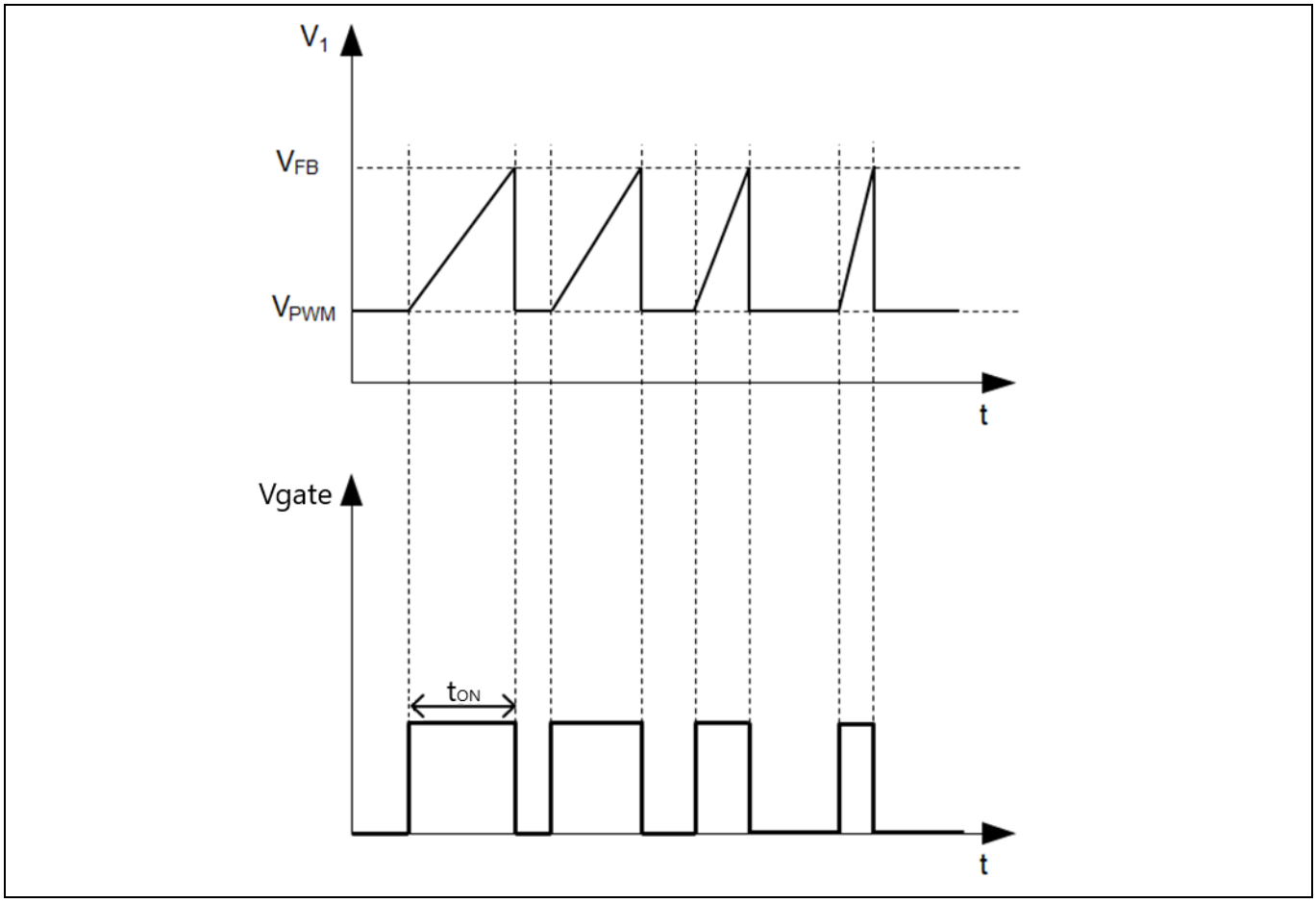

Figure 7 PWM

4.3.2 Current sensing

The power MOSFET current generates a voltage V_{CS} across the CS resistor R_{CS} connected between the CS pin and the GND pin. V_{CS} is amplified with gain G_{PWM}, then added with an offset V_{PWM} to become V_1, as described in the following equation.

$$V_{\mathrm{CS}} = I_{\mathrm{D}} \times R_{\mathrm{CS}}$$

Equation 3 Current sensing voltage

Where,

- V_{CS} = CS pin voltage
- I_D = Power MOSFET current
- R_{CS} = Resistance of the CS resistor

$$V_1 = V_{\mathrm{CS}} \times G_{\mathrm{PWM}} + V_{\mathrm{PWM}}$$

Equation 4 Voltage level

Where,

- V_1 = Voltage level compared to V_{FB} as described in Section 4.3.1.2
- G_{PWM} = PWM-OP gain
- V_{PWM} = Offset for voltage ramp

4.3.3 Frequency reduction

Frequency reduction is implemented to achieve better efficiency at light-load condition. At light-load, the reduced switching frequency f_{SW} improves efficiency by reducing the switching losses.

When load decreases, V_{FB} decreases as well. f_{SW} is dependent on the V_{FB} as shown in Figure 8. Therefore, f_{SW} decreases as the load decreases.

Typically, f_{SW} at high load is 65/100 kHz/125 kHz and starts to decrease at V_{FB} = 1.7 V. There is no further frequency reduction once it reaches the f_{OSCx_MIN} even if the load is further reduced.

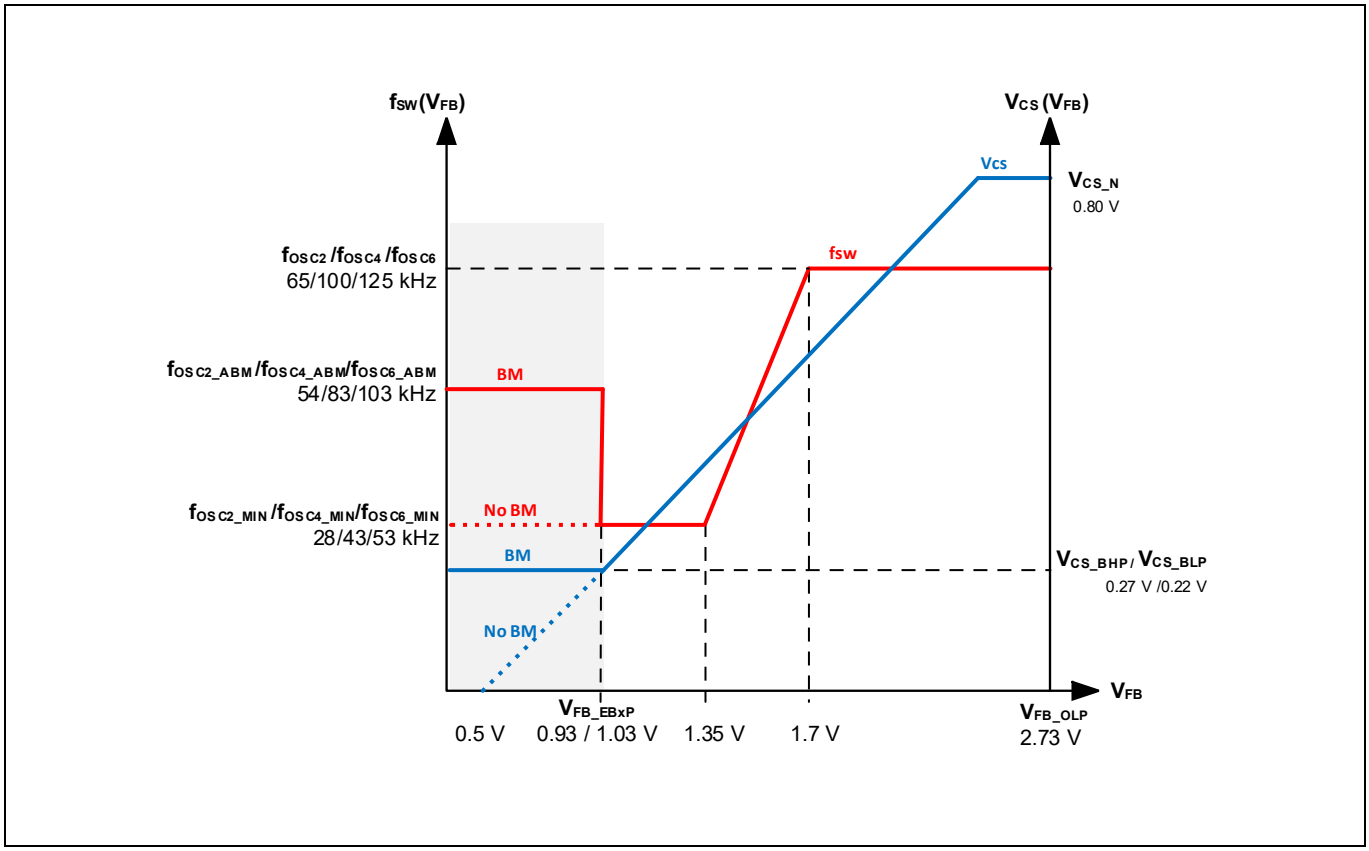

Figure 8 Frequency reduction curve

4.3.4 Slope compensation

In CCM operation, a duty cycle greater than 50% may generate a sub-harmonic oscillation. A small perturbation on the transformer flux φ can result in loop instability where the system cannot auto-correct itself, as seen in the following figure right, where $\Delta\varphi_2$ is greater than $\Delta\varphi_1$. $\Delta\varphi_2$ should be less than $\Delta\varphi_1$ for a system to be stable (following figure left). DCM operation is more stable, as the transformer flux always goes to zero.

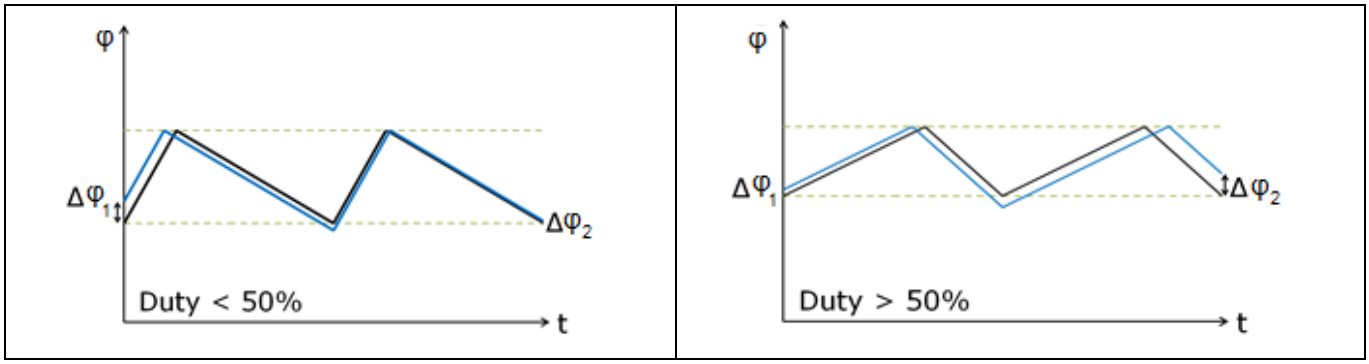

Figure 9 Perturbed transformer charging and discharging flux (black line is the stabilized transformer flux)

ICE5xRxxxxAG-1 switching controller can operate in CCM. To avoid the sub-harmonic oscillation, slope compensation is added to V_{CS} when the gate of the power MOSFET is turned on for more than 40% of the switching cycle period. The relationship between V_{FB} and the V_{CS} for CCM operation is described in following the equation.

$$V_{FB} = V_{CS} \times G_{PWM} + V_{PWM} + M_{COMP} \times (t_{ON} - 40\% \times T_{PERIOD})$$

Equation 5 CCM operation

Where,

- t_{ON} = Gate turn-on time of the power MOSFET
- M_{COMP} = Slope compensation rate
- T_{PERIOD} = Switching cycle period

As a result of slope compensation, $\Delta\phi_2$ is reduced to smaller than $\Delta\phi_1$. Therefore, the system can stabilize itself as shown in the following figure.

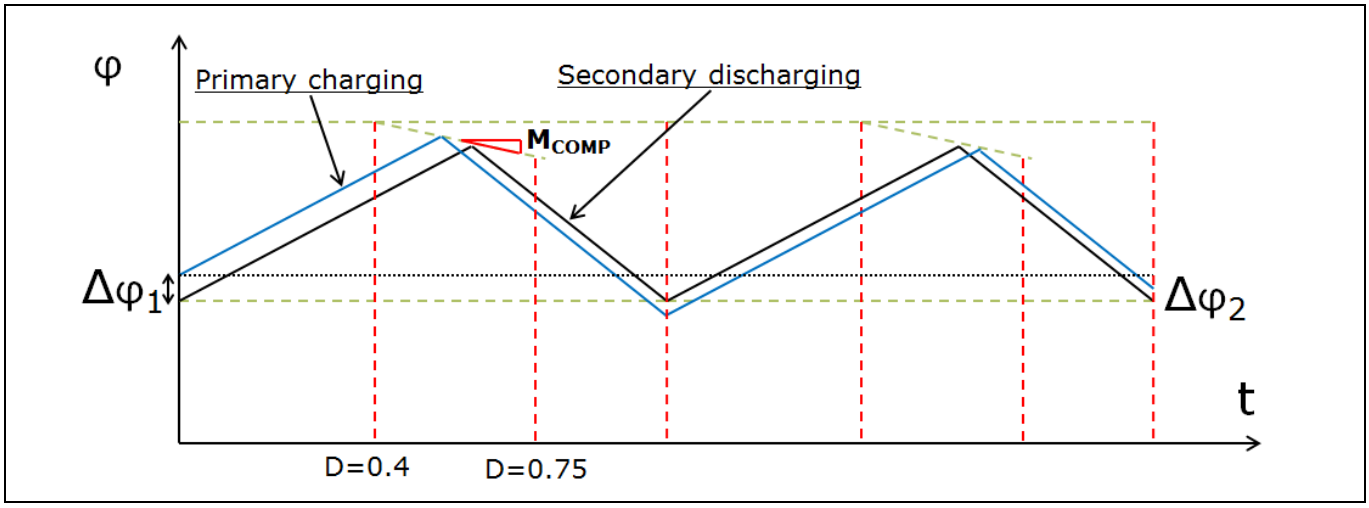

Figure 10 Perturbed transformer flux with slope compensation

The slope compensation circuit is disabled and no slope compensation is added to the V_{CS} pin during ABM operation to save on power consumption.

4.3.5 Oscillator and frequency jittering

The oscillator generates a frequency of 65/100/125 kHz (depending on part selected) with frequency jittering of ±4 percent at a jittering period of T_{JITTER} (4 ms). The frequency jittering helps to reduce conducted EMI.

A capacitor, current source, and current sink that determine the frequency are integrated. The charging and discharging current of the implemented oscillator capacitor are internally trimmed to achieve a highly accurate switching frequency.

After the soft start period is over and when the IC goes into normal operating mode, the frequency jittering is enabled. There is also frequency jittering during frequency reduction.

4.3.6 Modulated gate drive

The drive stage is optimized for EMI consideration. The switch-on speed is slowed down before it reaches the power MOSFET turn-on threshold. There is a slope control on the rising edge at the output of the driver (see Figure 11). In this way the leading switch spike during turn-on is minimized.

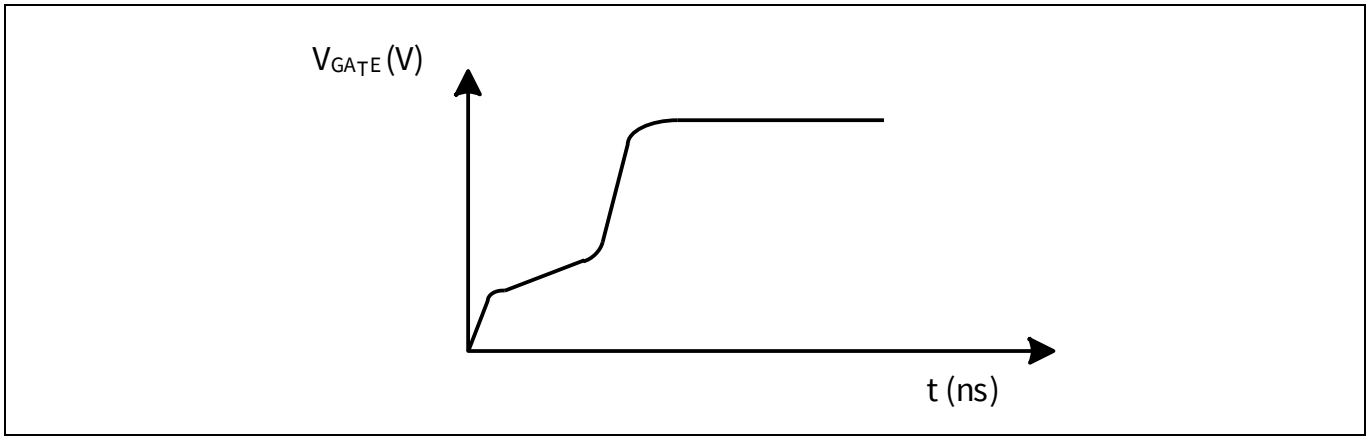

Figure 11 Gate – rising waveform

Do not connect a gate discharge resistor on the GATE pin to the GND pin. The discharge resistor together with the $R_{StartUp}$ will form a voltage divider. With the high ratio of the resistance of $R_{StartUp}$ with discharge resistor, the gate voltage of the power MOSFET cannot turn it on and charge the V_{CC} to exceed V_{VCC_ON}. Similarly, connecting a voltage probe on the GATE pin can result in a non-startup or a longer startup time, depending on the probe resistance.

4.4 Peak current limitation (PCL)

There is a cycle-by-cycle PCL realized by the current limit comparator to provide primary overcurrent protection (OCP). The primary current generates a voltage V_{CS} across the CS resistor R_{CS} connected between CS and GND pins. If the voltage V_{CS} exceeds an internal voltage limit V_{CS_N}, the comparator immediately turns off the gate drive.

The primary peak current I_{PEAK_PRI} can be calculated as follows:

$$I_{\mathrm{PEAK_PRI}} = V_{\mathrm{CS_N}} / R_{\mathrm{CS}}$$

Equation 6 Primary peak current

Where,

- I_{PEAK_PRI} = Maximum peak current in the primary
- V_{CS_N} = Threshold voltage for the PCL
- R_{CS} = Resistance of the CS resistor

To avoid mis-triggering caused by MOSFET switch-on transient voltage spikes, a leading edge blanking (LEB) time (t_{CS_LEB}) is integrated into the current sensing path.

Note: *In case of high switch-on noise at the CS pin, the IC can switch off immediately after the LEB time, especially at light-load high-line conditions. To avoid this, a noise-filtering ceramic capacitor (e.g., 100 pF~100 nF) can be added across CS pin and GND pin.*

4.4.1 Propagation delay compensation

In case of overcurrent detection, there is always a propagation delay from sensing the V_{CS} to switching off the power MOSFET. An overshoot on the peak current I_{peak} caused by the delay depends on the ratio of dI/dt of the primary current (see Figure 12).

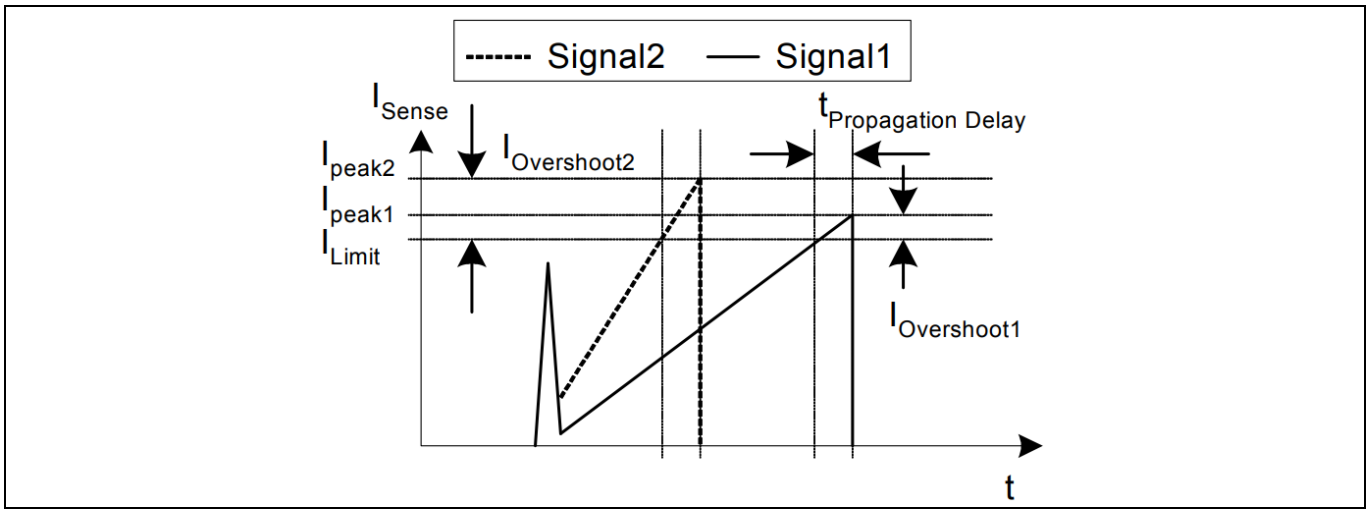

Figure 12 Current limiting

The overshoot of Signal2 is larger than Signal1 due to the steeper rising waveform. This change in the slope depends on the AC input voltage. Propagation delay compensation is integrated to reduce the overshoot due to dI/dt of the rising primary current. Therefore, the propagation delay time between exceeding the CS threshold V_{CS_N} and the switching off of the power MOSFET is compensated over a wide bus voltage range. Current limiting becomes more accurate, which will result in a minimum difference of overload protection triggering power between low and high AC-line input voltage.

Under CCM operation, the same V_{CS} does not result in the same power. To achieve a close over-load triggering level for CCM operation, the ICE5xRxxxxAG-1 switching controller has implemented a two-curve compensation, as shown in Figure 13. One of the curves is used for T_{ON} greater than 0.40 duty cycle and the other is for T_{ON} lower than 0.40 duty cycle.

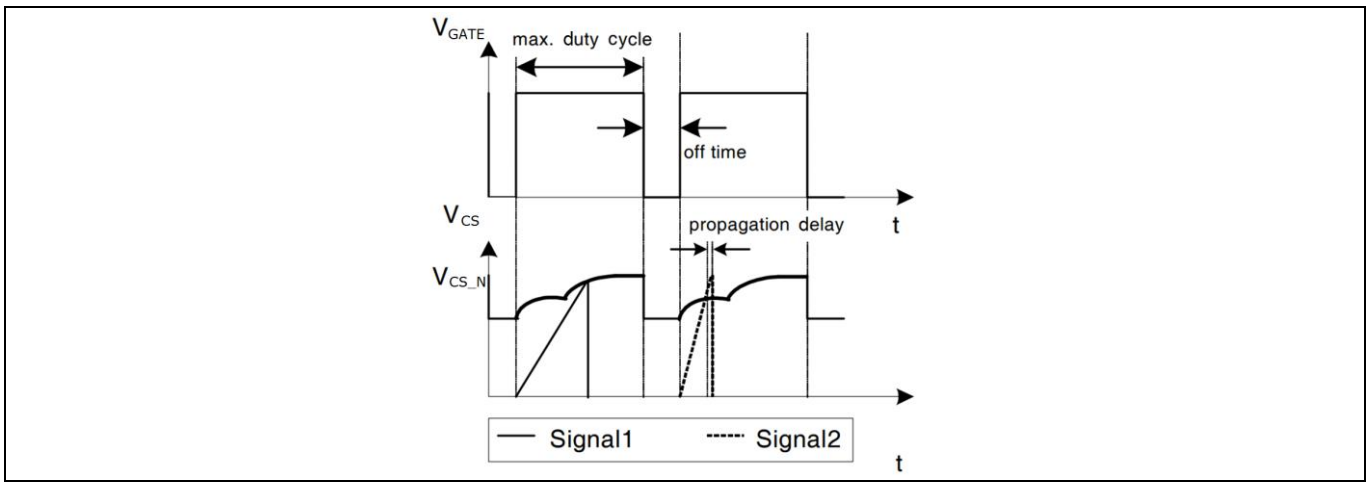

Figure 13 Dynamic voltage threshold V_{CS_N}

Similarly, the same concept of propagation delay compensation is also implemented in Active Burst Mode (ABM) operation at a reduced level. With this implementation, the entry and exit burst mode power can remain close between low and high AC-line input voltage.

4.5 Active Burst Mode (ABM) with selectable power level

At light load, the IC enters ABM operation to minimize power consumption. Details of ABM operation are explained in the following sections.

4.5.1 Entering ABM operation

Once V_{FB} voltage remains lower than the threshold of V_{FB_EBLP}/V_{FB_EBHP} (depending on burst configuration option setup) for a certain blanking time of t_{FB_BEB}, the ABM flip-flop is set and the system enters ABM operation. This multi-condition determination for entering ABM operation prevents mis-triggering of entering ABM operation, so that the controller enters ABM operation only when the output power is really low.

The threshold power to enter burst mode can be determined using the following equation.

$$P_{\text{enter_burst}} = \frac{1}{2} \times L_p \times f_{OSCx_MIN} \times \left(\frac{V_{FB_EBxP} - V_{PWM}}{R_{CS} \times G_{PWM}}\right)^2$$

Equation 7 Threshold power

Where,

- L_P = Primary inductance
- f_{OSCx_MIN} = Minimum switching frequency (f_{osc2_min}, f_{osc4_min} or f_{osc6_min})
- V_{FB_EBxP} = V_{FB} entering ABM

The burst power as a ratio to the maximum input power P_{IN_Max} can be expressed in the following equation.

$$\frac{P_{enter_burst}}{P_{IN_Max}} = \frac{f_{OSCx_MIN}}{f_{OSC4}} \times \left(\frac{V_{FB_EBxP} - V_{PWM}}{V_{CS_N} \times G_{PWM}}\right)^2$$

Equation 8 Burst power

4.5.2 During ABM operation

After entering ABM, the PWM section will be inactive, making the V_{Out} start to decrease. As the V_{Out} decreases, the V_{FB} rises. Once V_{FB} exceeds V_{FB_BOn}, the internal circuit is again activated by the internal bias to start the switching.

If the PWM is still operating and the output load is still low, V_{Out} increases and the V_{FB} signal starts to decrease. When V_{FB} reaches the low threshold V_{FB_BOff}, the internal bias is reset again and the PWM section is disabled, with no switching until V_{FB} increases and once again exceeds the V_{FB_BOn} threshold.

In ABM, V_{FB} is like a sawtooth waveform swinging between V_{FB_BOff} and V_{FB_BOn}, as shown in Figure 14.

During ABM, for example, the switching frequency f_{OSC4_ABM} is 83 kHz. The peak current I_{PEAK_ABM} of the power MOSFET is defined as follows:

$$I_{\text{PEAK_ABM}} = V_{\text{CS_BxP}}/R_{\text{CS}}$$

Equation 9 Peak current of the power MOSFET

Where,

- V_{CS_BxP} = PCL in ABM

4.5.3 Leaving ABM operation

The FB voltage immediately increases if there is a sudden increase in the output load. When V_{FB} exceeds V_{FB_LB}, it will leave ABM and the PCL threshold voltage will return back to V_{CS_N} immediately.

The power on leaving ABM can be determined using the following equation.

$$P_{\text{leave_burst}} = \frac{1}{2} \times L_p \times f_{OSC4_ABM} \times \left(\frac{V_{CS_BxP}}{R_{CS}}\right)^2$$

Equation 10 Power on leaving ABM

Where,

- f_{OSC4_ABM} = ABM switching frequency
- V_{CS_BxP} = PCL in ABM

Therefore, the ratio of the power on leaving ABM to the maximum input power can be determined using the following equation.

$$\frac{P_{leave_burst}}{P_{IN_Max}} = \frac{f_{OSC4_ABM}}{f_{OSC4}} \times \left(\frac{V_{CS_BxP}}{V_{CS_N}}\right)^2$$

Equation 11 Ratio of the power on leaving ABM

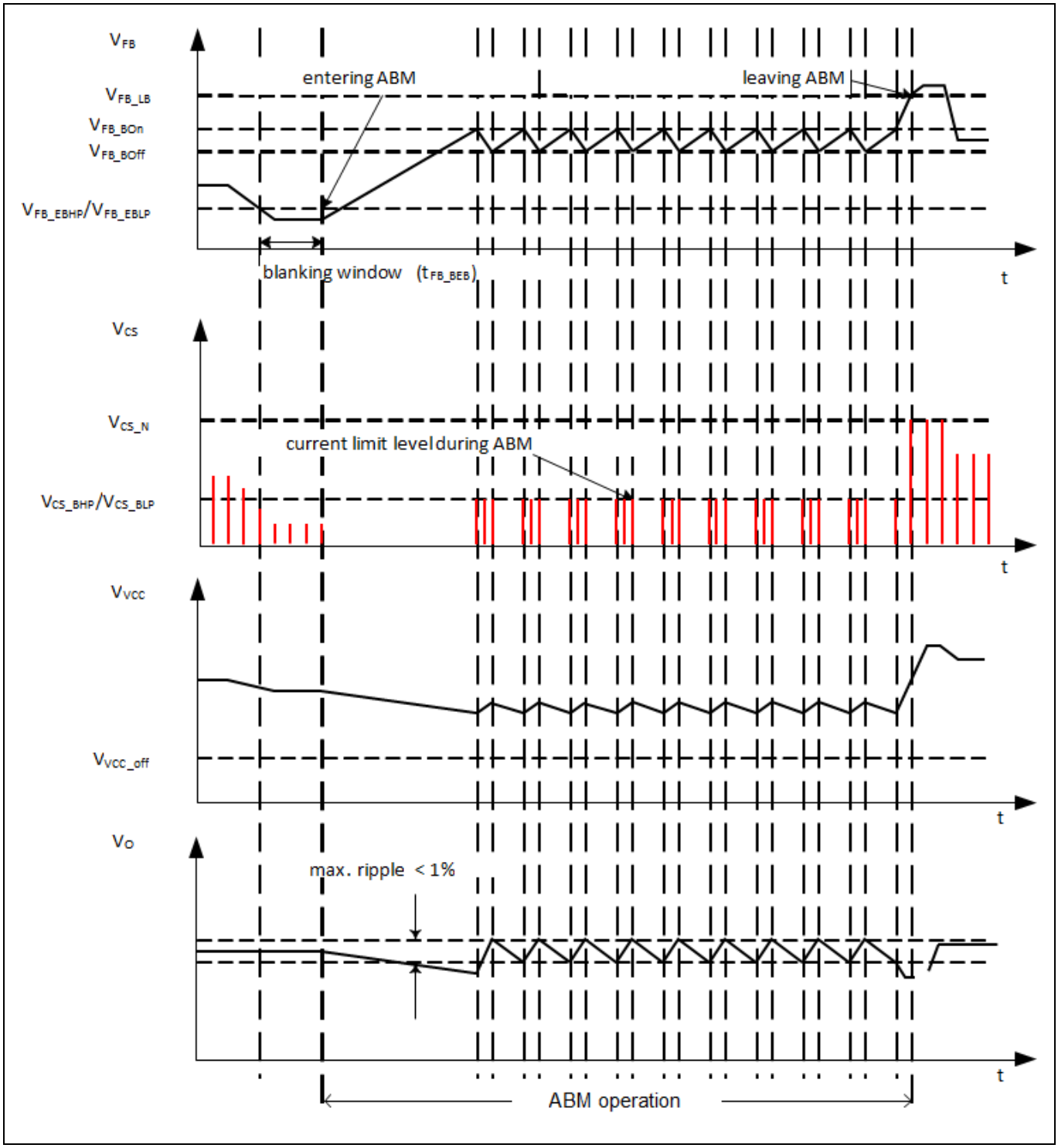

Figure 14 Signals in ABM

4.5.4 ABM configuration

The burst mode entry level can be selected by changing the resistance R_{Sel} at the FB pin. There are three configuration options depending on R_{Sel}, which corresponds to the options of no ABM (Option 1), low range of ABM power (Option 2), and high range of ABM power (Option 3). The following table shows the control logic for the entry and exit levels with the FB voltage.

Table 2 ABM configuration option setup

Option	R_{Sel}	V_{FB}	V_{CS_BxP}	Entry level		Exit level	
				V_{FB_EBxP}	Percentage of P_{IN_Max}	V_{FB_LB}	Percentage of P_{IN_Max}
1	400~ 470 kΩ	$V_{FB} < V_{FB_P_BIAS1}$	–	–	No ABM	–	No ABM
2	720~790 kΩ	$V_{FB_P_BIAS1} < V_{FB} < V_{FB_P_BIAS2}$	0.22 V	0.93 V	~3 %	2.73 V	~6.2 %
3 (default)	preferable open	$V_{FB} > V_{FB_P_BIAS2}$	0.27 V	1.03 V	~4.5 %	2.73 V	~9.4 %

P_{IN_Max} is the input power before the overload protection is triggered.

During startup of the IC, the controller presets the ABM selection to Option 3, the FB resistor (R_{FB}) is turned off by internal switch S2 (see Figure 15) and a current source I_{sel} is turned on instead. From V_{CC} = 4.4 V to the V_{CC} on-threshold, the FB pin will source current I_{Sel} through R_{Sel} and external FB network. When V_{CC} reaches the V_{CC} on-threshold, the FB voltage is sensed. The burst mode option is then chosen according to the FB voltage level. After finishing the selection, any change on the FB level will not change the burst mode option, and the current source (I_{sel}) is turned off while the FB resistor (R_{FB}) is connected back to the circuit.

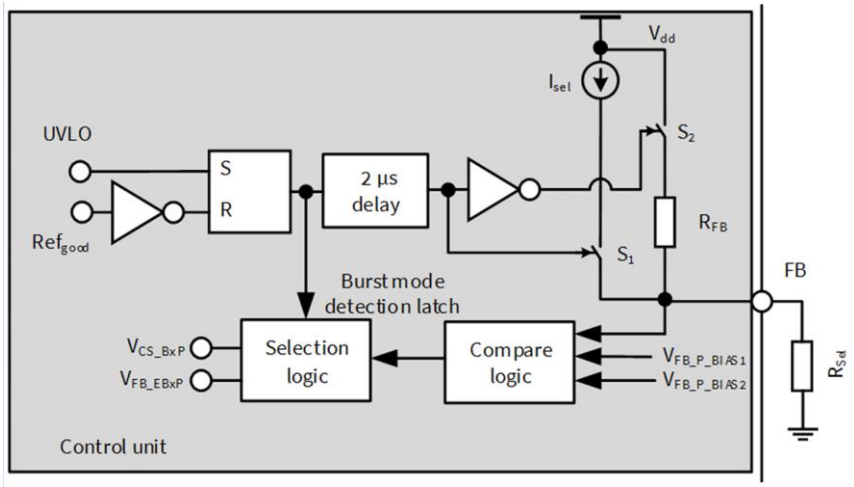

Figure 15 ABM detect and adjust

4.6 Non-isolated/isolated configuration

ICE5xRxxxxAG-1 switching controller has a VERR pin, which is connected to the input of an integrated error amplifier to support non-isolated flyback application (see Figure 3). When the V_{CC} is charging and before reaching the V_{CC} on-threshold, a current source $I_{ERR_P_BIAS}$ from the VERR pin together with R_{F1} and R_{F2} will generate a voltage across it. If the VERR voltage is more than $V_{ERR_P_BIAS}$ (0.2 V), non-isolated configuration is selected; otherwise, isolated configuration is selected. In isolated configuration, the error amplifier output is disconnected from the FB pin.

Connect the VERR pin to GND if an error amplifier is not used or if isolated configuration is selected.

4.6.1 Non-isolated FB

In case of non-isolated configuration (see Figure 3), the voltage divider R_{F1} and R_{F2} is used to sense the output voltage and compare it with the internal reference voltage V_{ERR_REF}. The difference between the sensed voltage and the reference voltage is converted as an output current by the error amplifier. The output current will charge/discharge the resistor and capacitor network connected at the FB pin for the loop compensation.

To properly detect a non-isolated configuration, the minimum resistance for the parallel combination of resistors R_{F1} and R_{F2} is calculated as follows:

$$R_{F1//F2} \geq \frac{V_{ERR_P_BIAS_max}}{I_{ERR_P_BIAS_min}} = 0.24 \frac{V}{9.5} \mu A = 25.3\ k\Omega$$

Equation 12 Minimum resistance for parallel resistors

Where,

- $R_{F1//F2}$ = Parallel combination of R_{F1} and R_{F2}
- $V_{ERR_P_BIAS_max}$ = Maximum voltage for error amplifier mode
- $I_{ERR_P_BIAS_min}$ = Minimum bias current for error amplifier mode

The output voltage V_{P1} (see Figure 3) is set by R_{F1} and R_{F2} using the following equation.

$$R_{F2} = R_{F1} \times \left(\frac{V_{P1}}{V_{ERR_REF}} - 1 \right)$$

Equation 13 Voltage divider resistors

Where,

- R_{F1} and R_{F2} = Voltage divider resistors
- V_{P1} = Output voltage
- V_{ERR_REF} = Error amplifier reference voltage

4.6.2 Isolated FB

In an isolated configuration, the output is usually sensed by a TL431 IC, and the output is fed to the FB pin by the optocoupler (see Figure 16). Inside the IC, the FB pin is connected to a (V_{REF}) 3.3 V reference voltage through an internal pull-up resistor R_{FB}. Outside the IC, this pin is connected to the collector of the optocoupler. Normally, a ceramic capacitor C_{FB}, e.g., 1 nF, can be placed between this pin and GND to filter out noise.

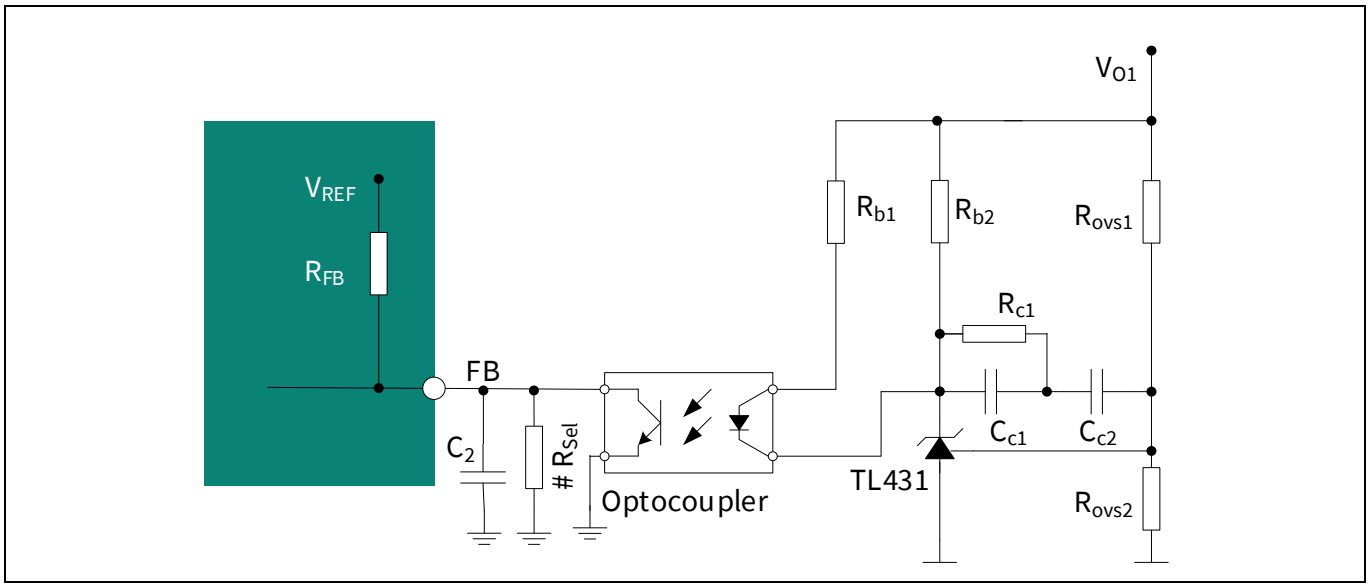

Figure 16 FB circuit for isolated configuration

The output voltage V_{O1} (see Figure 16) is set by R_{OVS1} and R_{OVS2} using the following equation.

$$R_{OVS1} = R_{OVS2}\left(\frac{V_{O1}}{V_{REF_TL}} - 1\right)$$

Equation 14 Output voltage divide resistors

Where,

- R_{OVS1} and R_{OVS2} = Voltage divider resistors
- V_{O1} = Output voltage
- V_{REF_TL} = TL431 reference voltage

4.7 Protection functions

ICE5xRxxxxAG-1 safety controller provides numerous protection functions that considerably improve the power supply system robustness, safety, and reliability. The following table summarizes these protection functions and the corresponding protection mode, whether non-switch auto-restart, auto-restart, or extended cycle skip auto-restart. See Figure 17, Figure 18, and Figure 19 for the waveform illustration of the protection modes.

Table 3 Protection functions

Protection functions	Normal mode	Burst mode		Protection mode
		Burst ON	Burst OFF	
Line overvoltage	√	√	√	Non-switch auto restart
V_{CC} overvoltage	√	√	Not applicable	Odd cycle skip auto restart
V_{CC} undervoltage	√	√	√	Auto restart
Overload/open loop	√	Not applicable	Not applicable	Odd cycle skip auto restart
Overtemperature	√	√	√	Non-switch auto restart
V_{CC} short-to-GND	√	√	√	No startup

4.7.1 Line overvoltage

The AC Line OverVoltage Protection (LOVP) is detected by sensing bus capacitor voltage through VIN pin via voltage divider resistors, R_{I1} and R_{I2} (see Figure 2 and Figure 3). Once V_{VIN} voltage is higher than the line overvoltage threshold (V_{VIN_LOVP}), the controller enters protection mode until V_{VIN} is lower than V_{VIN_LOVP}. This protection can be disabled by connecting the VIN pin to GND.

During line OVP, there is no MOSFET switching and V_{VIN} is always monitored in every restart cycle. The input line sensing resistors R_{I1} and R_{I2} can be calculated as below.

$$R_{I2} = \frac{R_{I1} \times V_{VIN_LOVP}}{(V_{Line_OVP_AC} \times \sqrt{2}) - V_{VIN_LOVP}}$$

Equation 15 Input line voltage sensing resistors

Where,

- R_{I1}: High-side line input sensing resistor (Typ. 9 MΩ)
- R_{I2}: Low-side line input sensing resistor
- V_{VIN_LOVP}: Line overvoltage threshold (Typ. 2.85 V)
- $V_{LINE_OVP_AC}$: User-defined line overvoltage (V_{AC}) for the system

4.7.2 V_{CC} OV/UV

During operation, the V_{CC} voltage is continuously monitored. If V_{CC} is either below V_{VCC_OFF} for 50 µs ($t_{VCC_OFF_B}$) or above V_{VCC_OVP} for 55 µs ($t_{VCC_OVP_B}$), the power MOSFET is kept switched off. After the V_{CC} voltage falls below the threshold V_{VCCoff}, the new startup sequence is activated. The V_{CC} capacitor is then charged up. After the voltage exceeds the threshold V_{VCC_ON}, the IC begins to operate with a new soft start.

4.7.3 Overload/open-loop

In case of open control-loop or output overload, the FB voltage will be pulled up. When V_{FB} exceeds V_{FB_OLP} after a blanking time of $t_{FB_OLP_B}$, the IC enters odd-skip auto-restart mode. The blanking time enables the converter to provide peak power in case the increase in V_{FB} is due to a sudden load increase.

4.7.4 Overtemperature

If the junction temperature of the controller exceeds t_{jcon_OTP}, the IC enters overtemperature protection (OTP) in auto-restart mode. The IC is also implemented with a 40°C hysteresis. It means the IC can only be recovered from OTP when the controller junction temperature drops 40°C lower than the OT trigger point.

4.7.5 V_{CC} short-to-GND

To limit the power dissipation of the startup circuit at V_{CC} short-to-GND, the V_{CC} charging current is limited to a minimum level of $I_{VCC_Charge1}$. With such low current, the power loss of the IC is limited to prevent over-heating.

4.7.6 Protection modes

All the protections are in auto-restart mode with a new soft start sequence. The three auto-restart modes are illustrated in the following figures.

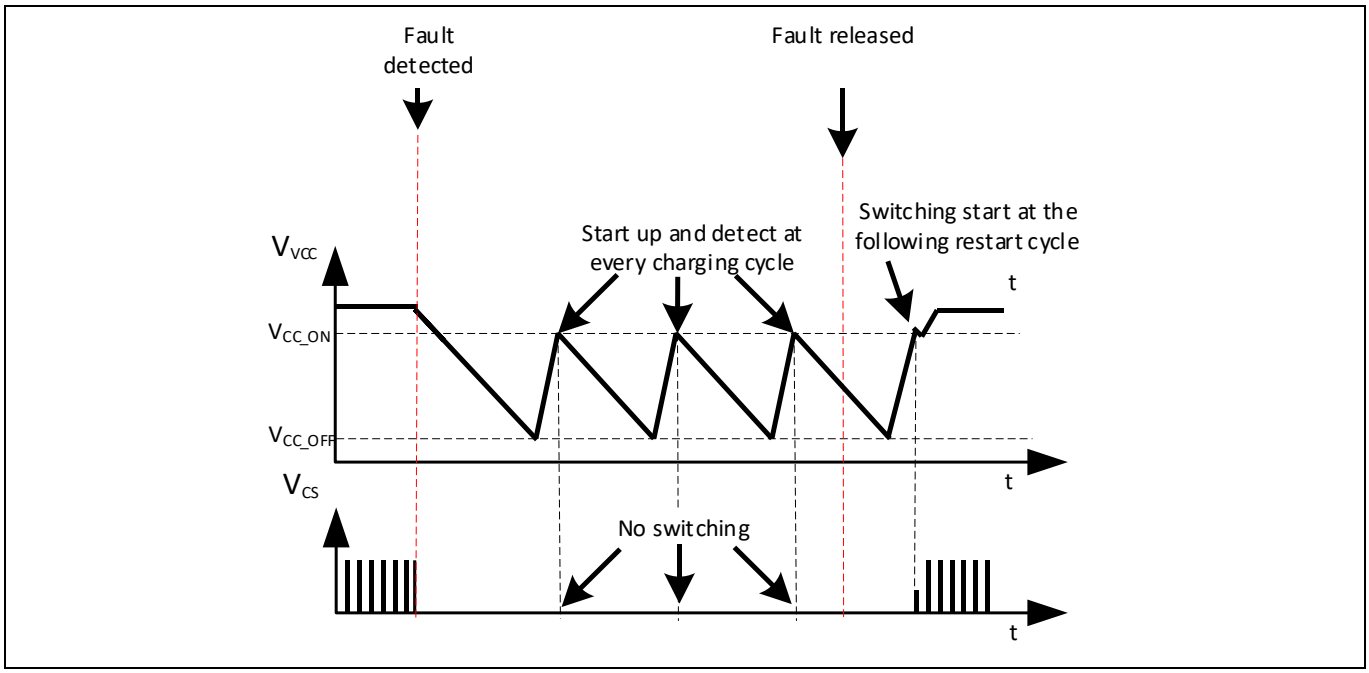

Figure 17 Non-switch auto-restart mode

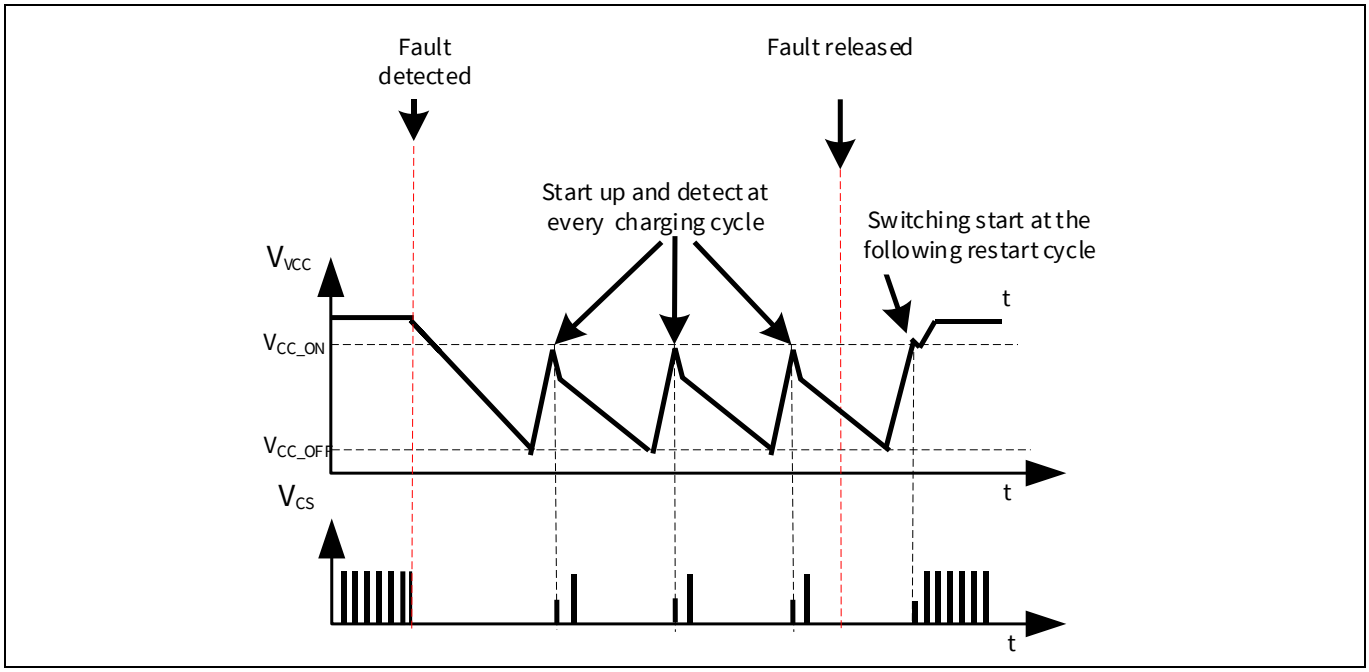

Figure 18 Auto-restart mode

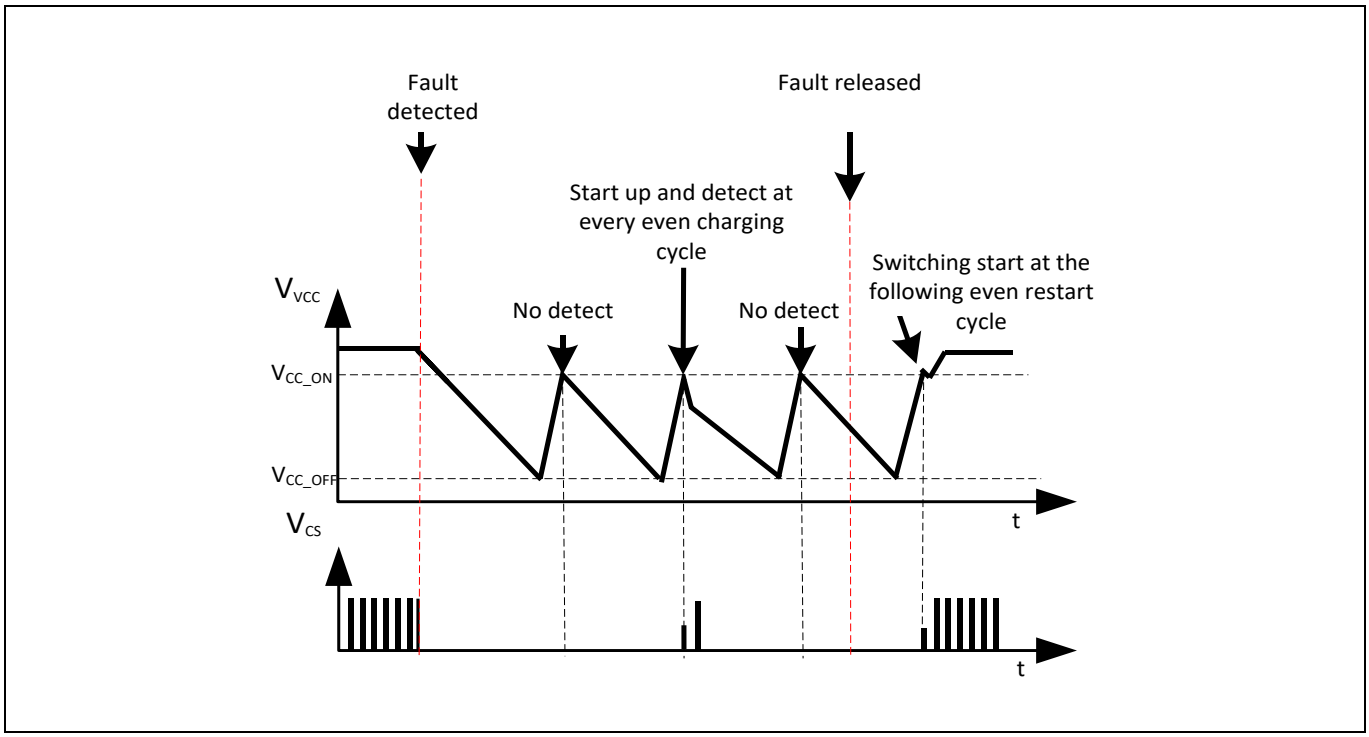

Figure 19 Odd cycle skip auto-restart

5 Schematic

A 14.5 W reference board schematic circuit with ICE5AR4770AG-1 switching controller is shown in the following figure.

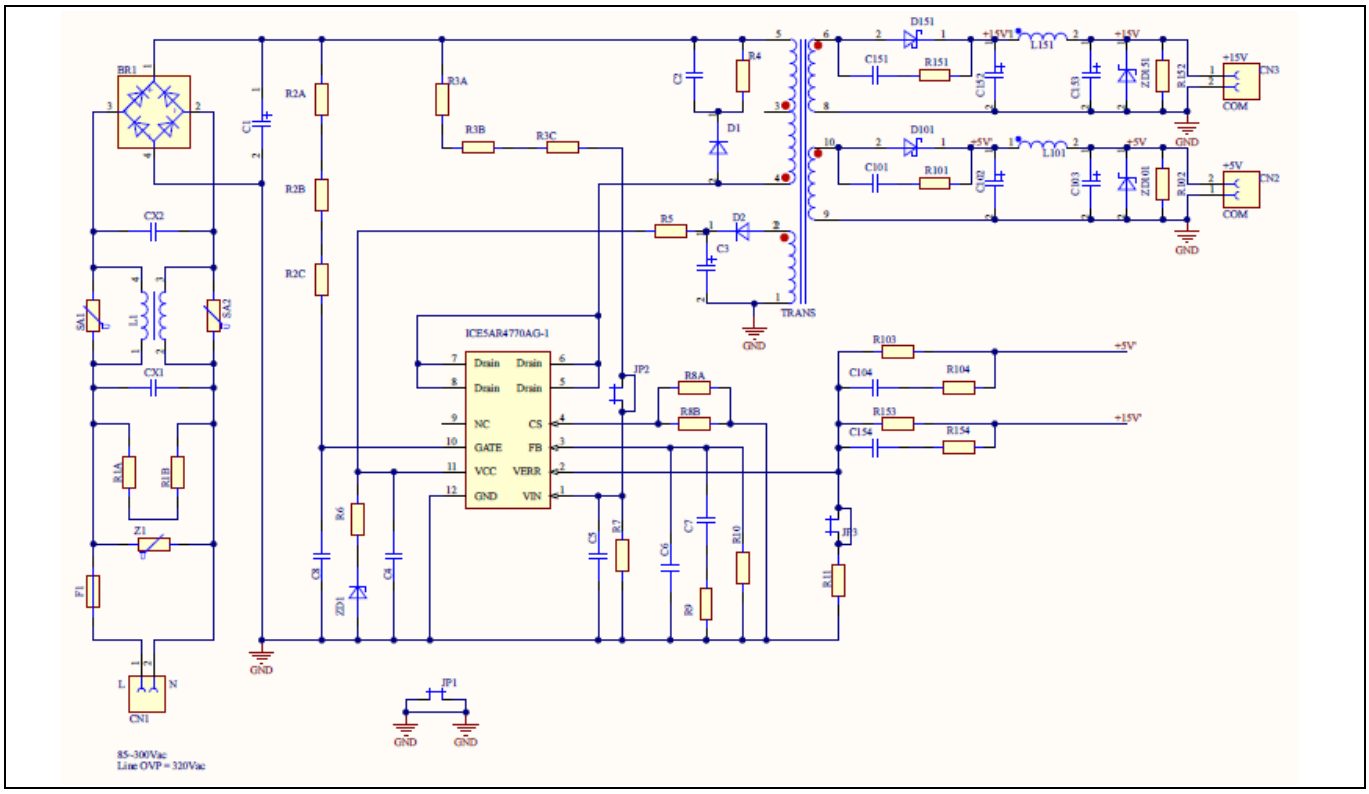

Figure 20 REF_5AR4770AG-1_14W1 schematic

6 PCB layout recommendations

In an SMPS, the PCB layout is crucial to a successful design (see Figure 20). Recommendations are as follows:

1. Minimize the loop with pulse share current or voltage; examples are the loop formed by the bus voltage source, primary winding, main power switch (CoolMOS™ inside the CoolSET™) and current sensing resistor or the loop consisting of the secondary winding, output diode and output capacitor, or the loop of the V_{CC} power supply
2. Star the ground at the bulk capacitor C1: connect all primary grounds to the ground of the bulk capacitor (C1) separately at one point. This can reduce the switching noise entering the sensitive pins of the CoolSET™ device. The primary star ground can be split into four groups as follows:
    i. Combine signal (all small signal grounds connecting to the controller/CoolSET™ GND pin such as the filter capacitor ground C4, C5, C6, and optocoupler ground) and power ground (CS resistor R8A and R8B)
    ii. V_{CC} ground includes the V_{CC} capacitor C3 ground and the auxiliary winding ground, pin 2 of the power transformer
    iii. EMI return ground includes the Y capacitor for isolated flyback application
    iv. DC ground from the bridge rectifier BR1
3. Place the filter capacitor close to the controller ground: place the filter capacitors, C4, C5, and C6 close to the controller ground and the controller pin so as to reduce the switching noise coupled into the controller.
4. High voltage(HV) traces clearance: maintain HV traces sufficient spacing to the nearby traces. Otherwise, arcing could occur
    i. 400 V traces (positive rail of bulk capacitor C1) to nearby traces: greater than 2.0 mm
    ii. 700/800/950 V traces (DRAIN pin of CoolSET™ IC, see Figure 20) to nearby traces: greater than 3 mm
5. Recommended minimum of 232 mm^2 copper area at the DRAIN pin to add to the PCB for better thermal performance of the CoolSET™

7 5th Generation Fixed-Frequency Plus design example

A design example of a 14.5 W, 15 V and 5 V fixed frequency non-isolated DCM flyback converter with ICE5AR4770AG–1 is as follows:

Table 4 Parameters

Define input parameters	Symbol	Value	Unit
Minimum AC input voltage	V_{ACMin}	85	V AC
Maximum AC input voltage	V_{ACMax}	330	V AC
Line frequency	f_{AC}	60	Hz
Bulk capacitor DC ripple voltage	$V_{DCRipple}$	27	V
Output voltage 1	V_{Out1}	15	V
Output current 1	I_{Out1}	0.83	A
Forward voltage of output diode 2	V_{FOut1}	0.6	V
Output ripple voltage 1	$V_{OutRipple1}$	0.2	V
Output voltage 2	V_{Out2}	5	V
Output current 2	I_{Out2}	0.4	A
Forward voltage of output diode 2	V_{FOut2}	0.2	V
Output ripple voltage 2	$V_{OutRipple2}$	0.2	V
Maximum output power	P_{OutMax}	17	W
Minimum output power	P_{OutMin}	1	W
Efficiency at V_{ACMin} and P_{OutMax}	η	83	%
Reflection voltage	V_{RSET}	97.5	V
V_{CC} voltage	V_{Vcc}	14	V
Forward voltage of V_{CC} diode (D2)	V_{FVcc}	0.6	V
CoolSET™ 5th Generation Fixed-Frequency Plus	CoolSET™	ICE5AR4780AG-1	
Switching frequency	f_s	100	kHz
Breakdown voltage	V_{DSMax}	800	V
Drain-to-source capacitance of MOSFET (including $C_{o(er)}$ of MOSFET)	C_{DS}	7	pF
Effective output capacitance of MOSFET	$C_{O(er)}$	3	pF
Startup resistor $R_{StartUp}$ (R2A, R2B, R2C)	$R_{StartUp}$	45	MΩ
Maximum ambient temperature	T_a	50	°C

7.1 Pre-calculation

Output power of output 1:

$$P_{Out1} = V_{Out1} \cdot I_{Out1} \quad \Rightarrow \quad P_{Out1} = 15\,V \cdot 0.83\,A = 12.45\,W$$

Equation 16

Output power of output 2:

$$P_{Out2} = V_{Out2} \cdot I_{Out2} \quad \Rightarrow \quad P_{Out2} = 5\,V \cdot 0.4\,A = 2\,W$$

Equation 17

Nominal output power:

$$P_{OutNom} = P_{Out1} + P_{Out2} \quad \Rightarrow \quad P_{OutNom} = 12.45\,W + 2\,W = 14.45\,W$$

Equation 18

Output power 1 load weight:

$$K_{L1} = P_{Out1}/P_{OutNom} \quad \Rightarrow \quad K_{L1} = 12.45\frac{W}{14.45}W = 0.86$$

Equation 19

Output power 2 load weight:

$$K_{L2} = P_{Out2}/P_{OutNom} \quad \Rightarrow \quad K_{L1} = 2\frac{W}{14.45}W = 0.14$$

Equation 19

Maximum input power:

$$P_{InMax} = \frac{P_{OutMax}}{\eta} \quad \Rightarrow \quad P_{InMax} = \frac{17\,W}{0.83} = 20.48\,W$$

Equation 20

7.2 Input diode bridge (BR1)

Input RMS current:

Power factor	cosφ	0.6
$I_{ACRMS} = \frac{P_{InMax}}{V_{ACMin} \times \boldsymbol{cos}\,\phi}$	⇒	$I_{ACRMS} = \frac{20.48\ W}{85\ V \times 0.6} = 0.402\ A$

Equation 21 Input RMS current

Maximum DC input voltage:

$V_{DC\,\boldsymbol{max}\,PK} = V_{ACMax} \times \sqrt{2}$	⇒	$V_{DCMaxPk} = 330\ V \times \sqrt{2} = 466.7\ V$

Equation 22

7.3 Input capacitor (C1)

Peak voltage at minimum AC input:

$V_{DCMinPk} = V_{ACMin} \times \sqrt{2}$	⇒	$V_{DCMinPk} = 85\ V \times \sqrt{2} = 120.2\ V$

Equation 23

Minimum DC input voltage-based ripple voltage setting:

$V_{DCMinSet} = V_{DCMinPk} - V_{DCRipple}$	⇒	$V_{DCMin}Set = 120.2\ V - 27\ V = 93.2\ V$

Equation 24

Discharging time at each half-line cycle:

$T_D = \frac{1}{4 \times f_{AC}} \times \left(1 + \frac{\boldsymbol{sin}^{-1}\frac{V_{DCMinSet}}{V_{DCMinPk}}}{90}\right)$	⇒	$T_D = \frac{1}{4 \times 60\ Hz} \times \left(1 + \frac{\boldsymbol{sin}^{-1}\frac{93.2\ V}{120.2\ V}}{90}\right) = 6.52\ ms$

Equation 25

Required energy at discharging time of input capacitor:

$$W_{IN} = P_{INMax} \times T_D \quad \Rightarrow \quad W_{IN} = 20.48\,W \times 6.52\,ms = 0.13\,W \cdot s$$

Equation 26

Calculated input capacitor:

$$C_{INCal} = \frac{2 \times W_{IN}}{V_{DCMinPk}^2 - V_{DCMinSet}^2} \quad \Rightarrow \quad C_{INCal} = \frac{2 \times 0.13\,W \cdot s}{(120.2\,V)^2 - (93.2\,V)^2} = 46.35\,\mu F$$

Equation 27

Alternatively, a thumb rule for estimating the input capacitor can be applied based on maximum input power, as follows:

Table 5 Input capacitor estimation

Input voltage	Factor
115 V AC	2 µF/W
230 V AC	1 µF/W
85–265 V AC	2–3 µF/W

Applying the thumb rule using the 2 µF/W factor:

$$C_{INEst} = P_{INMax} \times factor \quad \Rightarrow \quad C_{INEst} = 20.48 \times 2\,\mu = 41\,\mu F$$

Equation 28

Choose a capacitance greater than or equal to the calculated (Equation 27) or estimated (Equation 28) value, whichever is greater. The voltage rating should be greater than or equal to the maximum DC input voltage.

Input capacitor	C_{IN}	47 µF/500 V

Recalculation after input capacitor selection:

$$V_{DCMin} = \sqrt{V_{DCMinPk}^2 - \frac{2 \times W_{IN}}{C_{IN}}} \quad \Rightarrow \quad V_{DCMin} = \sqrt{(120.2\ V)^2 - \frac{2 \times 0.13\ W \cdot s}{47\ \mu F}} = 93.63\ V$$

Equation 29

Note: Special requirements for hold-up time, including cycle skip/drop-out, or other factors that affect the resulting minimum DC input voltage and capacitor discharging time, are not considered above.

7.4 Transformer design (TR1)

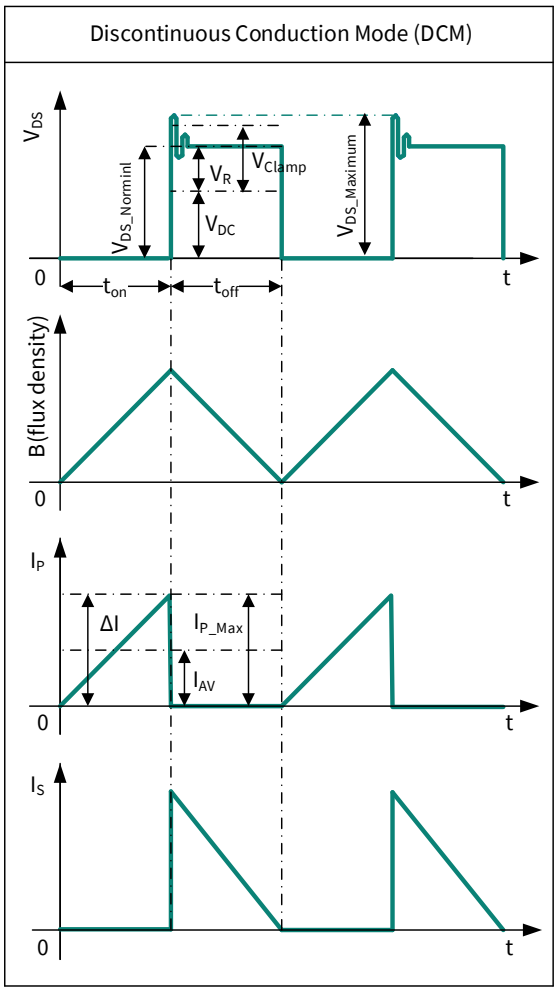

Figure 21 Typical waveforms of DCM operation

Maximum duty cycle:

$$D_{Max} = \frac{V_{RSET}}{V_{RSET}+V_{DCMin}} \quad \Rightarrow \quad D_{Max} = \frac{97.5\ V}{97.5\ V + 93.63\ V} = 0.51$$

Equation 30

Primary inductance:

$$L_P = \frac{(V_{DCMin}\times D_{Max})^2}{2\times P_{InMax}\times f_s \times K_{RF}} \quad \Rightarrow \quad L_P = \frac{(93.63\ V \times 0.51)^2}{2 \times 20.48\ W \times 100\ kHz \times 1} = 556.7\ \mu H$$

Equation 31

Primary average current during turn-on:

$$I_{AV} = \frac{P_{InMax}}{V_{DCMin}\times D_{Max}} \quad \Rightarrow \quad I_{AV} = \frac{20.48\ W}{93.63\ V \times 0.51} = 0.43\ A$$

Equation 32

Primary peak-to-peak current:

$$\Delta I = \frac{V_{DCMin}\times D_{Max}}{L_P \times f_s} \quad \Rightarrow \quad \Delta I = \frac{93.63\ V \times 0.51}{556.7\ \mu H \times 100\ kHz} = 0.86\ A$$

Equation 33

Primary peak current:

$$I_{PMax} = I_{AV} + \frac{\Delta I}{2} \quad \Rightarrow \quad I_{PMax} = 0.43\ A + \frac{0.86\ A}{2} = 0.86\ A$$

Equation 34

Primary valley current:

$$I_{Valley} = I_{PMax} - \Delta I \quad \Rightarrow \quad I_{Valley} = 0.86\ A - 0.86\ A = 0\ A$$

Equation 35

Primary RMS current:

$$I_{PRMS} = \sqrt{[3 \times (I_{AV})^2 + (\frac{\Delta I}{2})^2] \times \frac{Dmax}{3}} \quad \Rightarrow \quad I_{PRMS} = \sqrt{[3 \times (0.43)^2 + (\frac{0.86\ A}{2})^2] \times \frac{0.51}{3}} = 0.35\ A$$

Equation 36

Choose core type and bobbin from magnetic suppliers that can support the required power. Maximum flux density, typically from 200 mT to 400 mT, depends on the type of ferrite material. Select the following transformer material.

Table 6 Transformer material

Material	Value
Core type	E 20/10/6
Core material	N87
Maximum flux density (B_S)	390 mT at 100°C
Cross-sectional area (A_e)	32 mm²
Bobbin width (BW)	11 mm
Winding cross-section (A_N)	34 mm²
Winding perimeter (l_N)	41.2 mm

Set maximum flux density	B_{MAX}	200 mT

Calculate the minimum primary number of turns:

$$N_{PCal} \geq \frac{I_{PMax} \cdot L_p}{B_{Max} \cdot A_e} \quad \Rightarrow \quad N_{PCal} \geq \frac{0.86\ A \times 556.7\ \mu H}{200\ mT \times 32\ mm^2} = 74.6\ Turns$$

Primary number of turns	N_P	78 turns

Equation 37

Calculate secondary number of turns for V_{Out}:

$N_{S1Cal} = \frac{N_P \cdot (V_{Out1} + V_{FOut1})}{V_R}$	⇒	$N_{S1Cal} = \frac{78\ Turns \times (15\ V + 0.6\ V)}{97.5\ V} = 12.48\ Turns$	
Secondary 1 number of turns	N_{S2}	12 turns	

Equation 38

Calculate the secondary number of turns for V_{Out}:

$N_{S2Cal} = \frac{N_P \times (V_{Out2} + V_{FOut2})}{V_R}$	⇒	$N_{S2Cal} = \frac{78\ Turns \times (5\ V + 0.2\ V)}{97.5\ V} = 4.16\ Turns$	
Secondary 2 number of turns	N_{S2}	4 turns	

Equation 39

Calculate the number of turns for V_{CC}:

$N_{VccCal} = \frac{N_P \times (V_{Vcc} + V_{FVcc})}{V_R}$	⇒	$N_{VccCal} = \frac{78\ Turns \times (14\ V + 0.6\ V)}{97.5\ V} = 11.7\ Turns$	
Auxiliary number of turns	N_{Vcc}	11 turns	

Equation 40

Auxiliary supply voltage:

$V_{VccCal} = (V_{Out1} + V_{FOut1}) \times N_{Vcc}/N_{S1} - V_{FVcc}$	⇒	$V_{VccCal} = (15\ V + 0.6V) \times \frac{11}{12} - 0.6\ V = 13.7V$

Equation 41

7.5 Post calculation

Primary to secondary 1 turns ratio:

$$N_{PS1} = N_P / N_{S1} \quad \Rightarrow \quad N_{PS1} = 78\ turns / 12\ turns = 6.5$$

Equation 42

Primary to secondary 2 turns ratio:

$$N_{PS2} = N_P / N_{S2} \quad \Rightarrow \quad N_{PS2} = 78 turns / 4 turns = 19.5$$

Equation 43

Post-calculated reflected voltage:

$$V_{RPost} = (V_{Out1} + V_{FOut1}) \times N_P / N_{S1} \quad \Rightarrow \quad V_{RPost} = (15\ V + 0.6\ V) \times \frac{78}{12} = 101.4\ V$$

Equation 44

Post-calculated maximum duty cycle:

$$D_{MaxPost} = \frac{V_{RPost}}{V_{RPost} + V_{DCMin}} \quad \Rightarrow \quad D_{MaxPost} = \frac{101.4\ V}{101.4\ V + 93.63\ V} = 0.52$$

Equation 45

Duty cycle prime:

$$D'_{Max} = \frac{L_P \times f_s \times (I_{PMax} - I_{Valley})}{V_{RPost}} \quad \Rightarrow \quad D'_{Max} = \frac{556.7\ \mu H \times 100\ kHz \times (0.86\ A - 0\ A)}{101.4\ V} = 0.47$$

Equation 46

Actual flux density:

$$B_{MaxAct} = \frac{L_P \times I_{PMax}}{N_P \times A_e} \quad \Rightarrow \quad B_{MaxAct} = \frac{556.7\ \mu H \times 0.86\ A}{78 \times 32\ mm^2} = 191\ mT$$

Equation 47

Maximum DC input voltage for CCM operation:

$$V_{DC\,max\,CCM} = \left(\frac{1}{\sqrt{2 \times P_{InMax} \times L_P \times f_s}} - \frac{1}{V_{RPost}}\right)^{-1} \quad \Rightarrow \quad V_{DC\,max\,CCM} = \left(\frac{1}{\sqrt{2 \times 20.48\,W \times 557\,\mu H \times 100\,kHz}} - \frac{1}{101.4\,V}\right)^{-1} = 90.3\,V$$

Equation 48

7.6 Transformer winding design

Transformer design plays a significant role in efficiency. Interlacing primary and output windings can reduce leakage inductance, and this is one way to improve efficiency. It is also critical for safety concerns, especially in isolated applications. Therefore, consider creepage and clearance.

Standard safety margins between primary and secondary windings:

- M = 4 mm for European safety standard
- M = 3.2 mm for UL1950
- M = 0 mm for triple-insulated wire on either primary or secondary winding

Table 7 Safety margin

Safety margin	Symbol	Value
Standard safety margin	M	0 mm
Copper space factor	f_{Cu}	0.4 (0.2–0.4)

Effective bobbin width:

$$BW_E = BW - (2 \times M) \quad \Rightarrow \quad BW_E = 11\,mm - (2 \times 0) = 11\,mm$$

Equation 49

Effective winding cross-section:

$$A_{Ne} = \frac{A_N \times BW_e}{BW} \quad \Rightarrow \quad A_{Ne} = \frac{34\,mm^2 \times 11\,mm}{11\,mm} = 34\,mm^2$$

Equation 50

The effective winding cross-section must be divided between the primary and secondary windings. The design example is divided as follows:

Table 8 Effective winding

Winding	Symbol	Factor (%)
Primary winding	AF_{NP}	50
Secondary winding 1	AF_{NS1}	30
Secondary winding 2	AF_{NS2}	15
Auxiliary winding	AF_{NVcc}	5

7.6.1 Primary winding

Calculate copper wire cross-sectional area:

$$A_{PCal} = \frac{AF_{NP} \times f_{Cu} \times A_{Ne}}{N_P} \quad \Rightarrow \quad A_{PCal} = \frac{0.5 \times 0.4 \times 34\ mm^2}{78} = 0.087\ mm^2$$

Equation 51

Calculate maximum wire size:

$$AWG_{PCal} = 9.97 \times \left(1.8277 - \left(2 \times log\left(2 \times \sqrt{\frac{A_{PCal}}{\pi}}\right)\right)\right) \quad \Rightarrow \quad AWG_{PCal} = 9.97 \times \left(1.8277 - \left(2 \times log\left(2 \times \sqrt{\frac{0.087}{\pi}}\right)\right)\right) = 28$$

Selected wire size	AWG_P	30
Number of parallel wires	n_P	1

Equation 52

Copper wire diameter:

$$d_P = 10^{\left(\frac{1.8277}{2} - \frac{AWG_P}{2 \cdot 9.97}\right)} \quad \Rightarrow \quad d_P = 10^{\left(\frac{1.8277}{2} - \frac{30}{2 \cdot 9.97}\right)} = 0.26\ mm$$

Equation 53

Copper wire cross-sectional area:

$$A_P = \frac{\pi}{4} \times {d_P}^2 \times n_p \quad \Rightarrow \quad A_P = \frac{\pi}{4} \times (0.26\ mm)^2 \times 1 = 0.0517\ mm^2$$

Equation 54

Wire current density:

$$S_P = \frac{I_{PRMS}}{A_P} \quad \Rightarrow \quad S_P = \frac{0.35\ A}{0.052\ mm^2} = 6.8 A/mm^2$$

Equation 55

Note: Recommended wire current density is less than 8 A/mm².

Number of turns per layer using INS = 0.01 mm:

$$NL_P = \frac{BW_E}{n_P \times (d_P + 2 \times INS)} \quad \Rightarrow \quad NL_P = \frac{11\ mm}{1 \times (0.26\ mm + 2 \times 0.01\ mm)} = 39\ Turns/layer$$

Equation 56

Note: Insulation thickness (INS) for single-, double-, and triple-insulated wire is 0.01, 0.02, and 0.04 mm respectively. Ask the magnetics supplier for the actual insulation thickness.

Number of layers:

$$Ln_P = N_p / NL_P \quad \Rightarrow \quad Ln_P = 78 \frac{Turns}{\left(39 \frac{Turns}{layer}\right)} = 2\ layers$$

Equation 57

7.6.2 Secondary 1 winding (V_{Out1})

Calculate copper wire cross-sectional area:

$$A_{NS1Cal} = \frac{AF_{NS1} \times f_{Cu} \times A_{Ne}}{N_{S1}} \quad \Rightarrow \quad A_{NS1Cal} = \frac{0.30 \times 0.4 \times 34\ mm^2}{12} = 0.34\ mm^2$$

Equation 58

Calculate the maximum wire size:

$$AWG_{NS1Cal} = 9.97 \times \left(1.8277 - \left(2 \times log\left(2 \times \sqrt{\frac{A_{NS1Cal}}{\pi}}\right)\right)\right) \quad \Rightarrow \quad AWG_{NS1Cal} = 9.97 \times \left(1.8277 - \left(2 \times log\left(2 \times \sqrt{\frac{0.34\ mm^2}{\pi}}\right)\right)\right) = 22$$

Selected wire size	AWG_{S1}	26
Number of parallel wires	n_{S1}	2

Equation 59

Copper wire diameter:

$$d_{S1} = 10^{\left(\frac{1.8277}{2} - \frac{AWG_{S1}}{2 \cdot 9.97}\right)} \quad \Rightarrow \quad d_{S1} = 10^{\left(\frac{1.8277}{2} - \frac{26}{2 \cdot 9.97}\right)} = 0.407\ mm$$

Equation 60

Copper wire cross-sectional area:

$$A_{S1} = \frac{\pi}{4} \times {d_{S1}}^2 \times n_{S1} \quad \Rightarrow \quad A_{S1} = \frac{\pi}{4} \times (0.407)^2 \times 2 = 0.261\ mm^2$$

Equation 61

Peak current:

$$I_{S1Max} = I_{PMax} \times K_{L1} \times N_{PS1} \quad \Rightarrow \quad I_{S1Max} = 0.86\ A \times 0.86 \times 6.5 = 4.8\ A$$

Equation 62

RMS current:

$$I_{S1RMS} = I_{PRMS} \times K_{L1} \times \sqrt{\frac{1-D_{MaxPost}}{D_{MaxPost}}} \times N_{PS1} \quad \Rightarrow \quad I_{S1RMS} = 0.35A \times 0.86 \times \sqrt{\frac{1-0.52}{0.52}} \times 6.5 = 1.9\ A$$

Equation 63

Wire current density:

$$S_{S1} = \frac{I_{S1RMS}}{A_{S1}} \quad \Rightarrow \quad S_{S1} = \frac{1.9\ A}{0.261\ mm^2} = 7.3\ A/mm^2$$

Equation 64

Number of turns per layer using INS = 0.01 mm (non-isolated design does not need triple-insulated wire):

$$NL_{S1} = \left\lfloor \frac{BW_E}{nw_{S1} \times (d_{S1} + 2 \times INS_{S1})} \right\rfloor \quad \Rightarrow \quad NL_{S1} = \left\lfloor \frac{11\ mm}{2 \times (0.407\ mm + 2 \times 0.01\ mm)} \right\rfloor = 12\ Turns/layer$$

Equation 65

Number of layers of secondary 1 winding:

$$Ln_{S1} = \lceil N_{S1}/NL_{S1} \rceil \quad \Rightarrow \quad Ln_{S1} = \lceil 12\ Turns/(12\ Turns/layer) \rceil = 1\ layers$$

Equation 66

7.6.3 Secondary 2 winding (V_{Out2})

Calculate copper wire cross-sectional area:

$$A_{NS2Cal} = \frac{AF_{NS2} \times f_{Cu} \times A_{Ne}}{N_{S2}} \quad \Rightarrow \quad A_{NS2Cal} = \frac{0.15 \times 0.4 \times 34\ mm^2}{4} = 0.51\ mm^2$$

Equation 67

Calculate the maximum wire size:

$$AWG_{NS2Cal} = 9.97 \times \left(1.8277 - \left(2 \times log\left(2 \times \sqrt{\frac{A_{NS2Cal}}{\pi}}\right)\right)\right) \quad \Rightarrow \quad AWG_{NS2Cal} = 9.97 \times \left(1.8277 - \left(2 \times log\left(2 \times \sqrt{\frac{0.34}{\pi}}\right)\right)\right) = 20$$

Selected wire size	AWG_{S2}	26
Number of parallel wires	n_{S2}	26

Equation 68

Copper wire diameter:

$$d_{S2} = 10^{\left(\frac{1.8277}{2} - \frac{AWG_{S2}}{2 \cdot 9.97}\right)} \quad \Rightarrow \quad d_{S2} = 10^{\left(\frac{1.8277}{2} - \frac{26}{2 \cdot 9.97}\right)} = 0.407\ mm$$

Equation 69

Copper wire area:

$$A_{S2} = \frac{\pi}{4} \times {d_{S2}}^2 \times n_{S2} \quad \Rightarrow \quad A_{S2} = \frac{\pi}{4} \times (0.407)^2 \times 1 = 0.13\ mm^2$$

Equation 70

Peak current:

$$I_{S2Max} = I_{PMax} \times K_{L2} \times N_{PS2} \quad \Rightarrow \quad I_{S2Max} = 0.86A \times 0.14 \times 19.5 = 2.3\ A$$

Equation 71

RMS current:

$$I_{S2RMS} = I_{PRMS} \times K_{L2} \cdot \sqrt{\frac{1-D_{MaxPost}}{D_{MaxPost}}} \times N_{PS2} \quad \Rightarrow \quad I_{S2RMS} = 0.35A \times 0.14 \times \sqrt{\frac{1-0.52}{0.52}} \times 19.5 = 0.9\ A$$

Equation 72

Wire current density:

$$S_{S2} = \frac{I_{S2RMS}}{A_{S2}} \quad \Rightarrow \quad S_{S2} = \frac{0.9\ A}{0.130\ mm^2} = 7A/mm^2$$

Equation 73

Number of turns per layer using INS = 0.01 mm (non-isolated design does not need triple-insulated wire):

$$NL_{S2} = \left\lfloor \frac{BW_E}{nw_{S2} \times (d_{S2} + 2 \times INS_{S2})} \right\rfloor \quad \Rightarrow \quad NL_{S2} = \left\lfloor \frac{11\ mm}{1 \times (0.407\ mm + 2 \times 0.01\ mm)} \right\rfloor = 25\ Turns/layer$$

Equation 74

Number of layers:

$$Ln_{S2} = \lceil N_{S2}/NL_{S2} \rceil \quad \Rightarrow \quad Ln_{S2} = \left\lceil 4\frac{Turns}{25} Turns/layer \right\rceil = 1\ layer$$

Equation 75

7.7 Clamping network

For calculating the clamping network, it is required to know the leakage inductance L_{LK}. The most common approach is to have the L_{LK} value given in a percentage of the L_p. If it is known that the transformer construction is consistent, the L_{LK} can be measured by shorting the secondary windings (assuming the availability of a good LCR meter).

Leakage inductance:

Leakage inductance percentage	$L_{LK\%}$	2%
$L_{LK} = L_{LK\%} \times L_P$	⇒	$L_{LK} = 2\% \times 556.7\ \mu H = 11\ \mu H$

Equation 76

Clamping voltage:

Clamping voltage	⇒	$V_{Clamp} = 700\ V - 466.7\ V - 101.4\ V = 131.9\ V$

Equation 77

Calculate clamping resistor:

$R_{Clamp} = \frac{(V_{Clamp}+V_{Rpost})\times V_{Clamp}}{0.5\times L_{LK}\times I_{Pmax}^2\times f_s}$	⇒	$R_{Clamp} = \frac{(131.9 + 101.4) \times 131.9}{0.5 \times 11\ \mu H \times (0.86\ A)^2 \times 100\ kHz} = 75\ k\Omega$
Clamping resistor	R_{Clamp}	75 kΩ

Equation 78

Assuming 20% ripple for snubber voltage:

$C_{ClampCal} = \frac{V_{Clamp}+V_{Rpost}}{(Ripple\times R_{Clamp})\times f_s}$	⇒	$C_{ClampCal} = \frac{131.9 + 101.4}{(26\ V \times 75\ k\Omega) \times 100\ kHz} = 1.2\ nF$
Clamping capacitor	C_{Clamp}	1 nF

Equation 79

7.8 CS resistor

The CS resistor value defines the peak current of the power MOSFET. Therefore, design the transformer not to saturate at this peak current value. Because the IC cycle-by-cycle PCL is defined by this resistor and it also defines the maximum output power that can be delivered.

PCL threshold	V_{CS_N}	0.8 V
$R_{Sense} = \frac{V_{CS_N}}{I_{PMax}}$	⇒	$R_{Sense} = \frac{0.8\ V}{0.86\ A} = 0.93\ \Omega$
Current sense resistor selected	R8A, R8B	2 Ω, 2Ω (fine-tuned bench values)

Equation 80 CS resistor

7.9 Output rectifier

A low forward voltage and an ultrafast diode such as a Schottky diode are recommended for a highly efficient design. These diodes are subjected to large peak and RMS current stress. The minimum voltage rating (not including voltage spikes) and minimum current rating (not including peak power transients) are calculated in the following sections.

The output capacitor is required to minimize the output ripple. It also holds the necessary energy needed during high-load jumps. Therefore, the output capacitor must have enough capacitance and low ESR. It should also meet the ripple current rating.

An LC filter can be added to further reduce the output ripple.

7.9.1 Output 1

Diode reverse voltage and RMS current:

$V_{RDiode1} = V_{Out1} + \left(\frac{V_{DCMaxPK}}{N_{PS1}}\right)$	⇒	$V_{RDiode1} = 15\ V + \left(\frac{466.7\ V}{6.5}\right) = 86.8\ V$
Diode RMS current	I_{S1RMS}	1.9 A

Equation 81

Output capacitor ripple current:

Maximum voltage undershoot	ΔV_{Out}	0.3 V
Number of clock periods	n_{CP1}	20

$$I_{Ripple1} = \sqrt{(I_{S1RMS})^2 - (I_{Out1})^2} \Rightarrow I_{Ripple1} = \sqrt{(1.9\ A)^2 - (0.83\ A)^2} = 1.71\ A$$

Equation 82

Calculated output capacitance:

$C_{Out1Cal} = \frac{I_{Out1} \times n_{CP1}}{\Delta V_{OUT1} \times f_S}$	⇒	$C_{Out1Cal} = \frac{0.83\ A \times 20}{0.3\ V \times 100\ kHz} = 553\ \mu F$
Output capacitor	C_{Out1}	680 µF
ESR	R_{ESR1}	32 mΩ
Number of output capacitors in parallel	nc_{COut1}	1

Equation 83

Zero-frequency output capacitor:

$$f_{ZCOut1} = \frac{1}{2 \times \pi \times R_{ESR1} \times C_{Out1}} \Rightarrow f_{ZCOut1} = \frac{1}{2 \times \pi \times 32\ m\Omega \times 680\ \mu F} = 7.3\ kHz$$

Equation 84

Ripple voltage of first stage:

$$V_{Ripple1} = \frac{I_{S1Max} \times R_{ESR1}}{nc_{Cout1}} \Rightarrow V_{Ripple1} = \frac{4.8\ A \times 32\ m\Omega}{1} = 0.15\ V$$

Equation 85

Calculated LC filter capacitor:

Select LC filter inductor		L_{Out1}	2.2 µH
$C_{LCCal1} = \frac{(C_{Out1} \times R_{ESR1})^2}{L_{out1}}$	⇒	$C_{LCCal1} = \frac{(680\ \mu F \times 32\ m\Omega)^2}{2.2\ \mu H} = 215\ \mu F$	
LC filter capacitor		C_{LC1}	680 µF

Equation 86

LC filter frequency:

$$f_{LC1} = \frac{1}{2\times\pi\times\sqrt{C_{LC1}\times L_{OUT1}}} \quad \Rightarrow \quad f_{LC1} = \frac{1}{2 \times \pi \times \sqrt{680\ \mu F \times 2.2\ \mu H}} = 4.1\ kHz$$

Equation 87

Second stage ripple voltage:

$$V_{2ndRipple1} = V_{Ripple1} \times \frac{\frac{1}{2\times\pi\times f_S\times C_{LC1}}}{\frac{1}{2\times\pi\times f_S\times C_{LC1}}+(2\times\pi\times f_S\times L_{OUT1})} \quad \Rightarrow \quad V_{2ndRipple1} = 0.15V \times \frac{\frac{1}{2 \times \pi \times 100\ kHz \times 680\ \mu F}}{\frac{1}{2 \times \pi \times 100\ kHz \times 680\ \mu F} + (2 \times \pi \times 100\ kHz \times 2.2\ \mu H)} = 0.26\ mV$$

Equation 88

7.9.2 Output 2

Diode reverse voltage and RMS current:

$V_{RDiode2} = V_{Out2} + \left(\frac{V_{DCMaxPk}}{N_{PS2}}\right)$	⇒	$V_{RDiode2} = 5\ V + \left(\frac{466.7\ V}{19.5}\right) = 28.9\ V$	
Diode RMS current		I_{S2RMS}	0.92 A

Equation 89

Output capacitor ripple current for V_{Out2}:

Maximum voltage undershoot (V_{Out2})	ΔV_{Out}	0.15 V
Number of clock periods	n_{CP2}	20

$$I_{Ripple2} = \sqrt{(I_{S2RMS})^2 - (I_{Out2})^2} \Rightarrow I_{Ripple2} = \sqrt{(0.92\ A)^2 - (0.4\ A)^2} = 0.83\ A$$

Equation 90

Calculated output capacitance:

$$C_{Out2Cal} = \frac{I_{Out2} \times n_{CP2}}{\Delta V_{OUT2} \times f_S} \Rightarrow C_{Out2Cal} = \frac{0.4\ A \times 20}{0.15\ V \times 100\ kHz} = 533\ \mu F$$

Output capacitor	$C_{Out2Cal}$	680 µF
ESR	R_{ESR2}	32 mΩ
Number of output capacitors in parallel	nc_{COut2}	1

Equation 91

Zero-frequency output capacitor:

$$f_{ZCOut2} = \frac{1}{2 \times \pi \times R_{ESR2} \times C_{Out2Cal}} \Rightarrow f_{ZCOut2} = \frac{1}{2 \times \pi \times 32\ m\Omega \times 680\ \mu F} = 7.3\ kHz$$

Equation 92

Ripple voltage of first stage:

$$V_{Ripple2} = \frac{I_{S2Max} \times R_{ESR2}}{nC_{Out2Cal}} \Rightarrow V_{Ripple2} = \frac{2.31\ A \times 32\ m\Omega}{1} = 0.07\ V$$

Equation 93

Calculated LC filter capacitor:

Select LC filter inductor	L_{Out2}	2.2 µH	
$C_{LCCal2} = \frac{(C_{Out2Cal} \times R_{ESR2})^2}{L101}$	⇒	$C_{LCCal2} = \frac{(680\ \mu F \times 32\ m\Omega)^2}{2.2\ \mu H} = 215\ \mu F$	
LC filter capacitor	C_{LC2}	330 µF	

Equation 94

LC filter frequency:

$$f_{LC2} = \frac{1}{2\times\pi\times\sqrt{C_{LC2}\times L101}} \quad \Rightarrow \quad f_{LC2} = \frac{1}{2 \times \pi \times \sqrt{330\ \mu F \times 2.2\ \mu H}} = 5.9\ kHz$$

Equation 95

Second stage ripple voltage:

$$V_{2ndRipple2} = V_{Ripple2} \times \frac{\frac{1}{2\times\pi\times f_S\times C_{LC2}}}{\frac{1}{2\times\pi\times f_S\times C_{LC2}}+(2\times\pi\times f_S\times L101)} \quad \Rightarrow \quad V_{2ndRipple2} = 0.07V \times \frac{\frac{1}{2 \times \pi \times 100\ kHz \times 330\ \mu F}}{\frac{1}{2 \times \pi \times 100\ kHz \times 330\ \mu F} + (2 \times \pi \times 100\ kHz \times 2.2\ \mu H)} = 0.26\ mV$$

Equation 96

7.10 V_{CC} diode and capacitor

Auxiliary diode reverse voltage:

$$V_{RDiodeVCC} = V_{VccCal} + \left(V_{DCMaxPk} \times \frac{N_{Vcc}}{N_P}\right) \quad \Rightarrow \quad V_{RDiodeVCC} = 13.7\ V + \left(466.7 \times \frac{11}{78}\right) = 79.5\ V$$

Equation 97

Calculate the minimum V_{CC} capacitor:

Soft start time from datasheet	t_{SS}	12 ms
$I_{VCC_Normal2}$ from datasheet	$I_{VCC_Normal2}$	2.2 mA
V_{VCC_ON} from datasheet	V_{VCC_ON}	16 V
V_{VCC_OFF} from datasheet	V_{VCC_OFF}	10 V
$C_{Vcc} > \frac{I_{VCC_normal2} \times t_{ss}}{V_{VCC_ON} - V_{VCC_OFF}}$	⇒	$C_{Vcc} > \frac{2.2\ mA \times 12\ ms}{16\ V\ -10\ V} = 4.4\ \mu F$
Selected V_{CC} capacitor	C_{VCC}	22 µF

Equation 98

Startup time:

V_{CC} short threshold from datasheet	V_{VCC_SCP}	1.1 V
$I_{VCC_Charge1}$ from datasheet	$I_{VCC_Charge1}$	0.2 mA
$I_{VCC_Charge3}$ from datasheet	$I_{VCC_Charge3}$	3.0 mA
$t_{StartUp} = \frac{V_{VCC_SCP} \times C_{VCC}}{I_{VCC_Charge1}} + \frac{(V_{VCC_ON} - V_{VCC_SCP}) \times C_{VCC}}{I_{VCC_Charge3}}$	⇒	$t_{StartUp} = \frac{1.1\ V \times 22\ \mu F}{0.2\ mA} + \frac{(16\ V - 1.1\ V) \times 22\ \mu F}{3.0\ mA} = 230\ ms$

Equation 99

7.11 Calculation of losses

Input diode bridge loss:

Diode bridge forward voltage	V_{FBR}	0.7 V
$P_{DIN} = I_{ACRMS} \times V_{FBR} \times 2$	⇒	$P_{DIN} = 0.4\ A \times 0.7\ V \times 2 = 0.56\ W$

Equation 100

Transformer copper loss:

Copper resistivity at 100°C ρ_{100} 0.0172 Ω·mm²/m

$$R_{PCu} = \frac{l_N \times N_P \times \rho_{100}}{A_P} \Rightarrow R_{PCu} = \frac{41.2\ mm \times 78 \cdot 0.0172\ \Omega \cdot mm^2/m}{0.052\ mm^2} = 1068.5\ m\Omega$$

Equation 101

$$R_{S1Cu} = \frac{l_N \times N_{S1} \times \rho_{100}}{A_{S1}} \Rightarrow R_{S1Cu} = \frac{41.2\ mm \times 12 \times 0.0172\ \Omega \cdot mm^2/m}{0.2602\ mm^2} = 32.6\ m\Omega$$

Equation 102

$$R_{S2Cu} = \frac{l_N \times N_{S2} \times \rho_{100}}{A_{S2}} \Rightarrow R_{S1Cu} = \frac{41.2\ mm \times 4 \times 0.0172\ \Omega \cdot mm^2/m}{0.13\ mm^2} = 21.8\ m\Omega$$

Equation 103

$$P_{PCu} = {I_{PRMS}}^2 \times R_{PCU} \Rightarrow P_{PCu} = (0.35\ A)^2 \times 1068.5\ m\Omega = 133.63\ mW$$

Equation 104

$$P_{S1Cu} = {I_{S1RMS}}^2 \times R_{S1CU} \Rightarrow P_{S1Cu} = (1.9\ A)^2 \times 32.6\ m\Omega = 118\ mW$$

Equation 105

$$P_{S2Cu} = {I_{S2RMS}}^2 \times R_{S2CU} \Rightarrow P_{S2Cu} = (0.92\ A)^2 \times 21.8\ m\Omega = 18\ mW$$

Equation 106

$$P_{Cu} = P_{PCu} + P_{S1CU} + P_{S2Cu} \Rightarrow P_{Cu} = 133\ mW + 118\ mW + 18\ mW = 270\ mW$$

Equation 107

Output rectifier diode loss:

$$P_{Diode1} = I_{S1RMS} \times V_{FOut1} \quad \Rightarrow \quad P_{Diode1} = 1.9\,A \times 0.6\,V = 1.14\,W$$

Equation 108

Output rectifier diode loss:

$$P_{Diode2} = I_{S2RMS} \times V_{FOut2} \quad \Rightarrow \quad P_{Diode2} = 0.92\,A \times 0.2\,V = 0.18\,W$$

Equation 109

RCD clamper loss:

$$P_{Clamper} = \frac{1}{2} \times L_{LK} \times I_{PMax}^2 \times f_S \times \frac{V_{Clamp}+V_{RPost}}{V_{Clamp}} \quad \Rightarrow \quad P_{Clamper} = \frac{1}{2} \times 11\,\mu H \times (0.86\,A)^2 \times 100\,kHz \times \frac{131.9\,V + 101.4\,V}{131.9\,V} = 0.72\,W$$

Equation 110

CS resistor loss:

$$P_{CS} = (I_{PRMS})^2 \times R_{CS} \quad \Rightarrow \quad P_{CS} = (0.35\,A)^2 \times 1.0\,\Omega = 0.12\,W$$

Equation 111

MOSFET loss:

$R_{DS(on)}$ at T_J = 125°C from datasheet	$R_{DS(on)}$	8.73 Ω
$C_{o(er)}$ from datasheet	$C_{o(er)}$	3.4 pF
External drain-to-source capacitance	C_{DS}	0 pF

$$P_{SONMinAC} = \frac{1}{2} \times (C_{o(er)} + C_{DS}) \cdot (V_{DCMin} + V_{RPost})^2 \times f_S \quad \Rightarrow \quad P_{SONMinAC} = \frac{1}{2} \times (3.4\,pF + 0\,pF) \cdot (93.6\,V + 101.4\,V)^2 \times 100\,kHz = 6.5\,mW$$

Equation 112

$$P_{condMinAC} = {I_{PRMS}}^2 \times R_{DSON} \quad \Rightarrow \quad P_{condMinAC} = (0.35\ A)^2 \times 8.73\ \Omega = 1.09\ W$$

Equation 113

$$P_{MOSMinAC} = P_{SONMinAC} + P_{condMinAC} \quad \Rightarrow \quad P_{MOSMinAC} = 6.5\ mW + 1.09\ W = 1.10\ W$$

Equation 114

$$P_{SONMaxAC} = \frac{1}{2} \times \left(C_{o(er)} + C_{DS}\right) \times (V_{DCMaxPk} + V_{RPost})^2 \times f_S \quad \Rightarrow \quad P_{SONMaxAC} = \frac{1}{2} \times (3.4\ pF + 0\ pF) \times (466.7\ V + 101.4\ V)^2 \times 100\ kHz = 55\ mW$$

Equation 115

$$P_{condMaxAC} = \frac{1}{3} \times R_{DSON} \times I_{PMax}^2 \times \left(\frac{L_P \times I_{PMax} \times f_S}{V_{DCMaxPk}}\right) \quad \Rightarrow \quad P_{condMaxAC} = \frac{1}{3} \times 8.73\ \Omega \times (0.86\ A)^2 \times \left(\frac{557\mu H \times 0.86\ A \times 100\ kHz}{466.7\ V}\right) = 0.22\ W$$

Equation 116

$$P_{MOSMaxAC} = P_{SONMaxAC} + P_{condMaxAC} \quad \Rightarrow \quad P_{MOSMaxAC} = 55\ mW + 0.22\ W = 0.27\ W$$

Equation 117

Controller loss:

Controller current consumption	I_{VCC_Norma2}	2.2 mA

$$P_{Ctrl} = V_{VCCCal} \times I_{VCC_Normal2} \quad \Rightarrow \quad P_{Ctrl} = 13.7\ V \times 2.2\ mA = 30.14\ mW$$

Equation 118

Total power loss:

$$P_{losses} = P_{DIN} + P_{Cu} + P_{Diode1} + P_{Diode2} + P_{Clamper} + P_{CS} + P_{MOS} + P_{Ctrl} \quad \Rightarrow \quad P_{losses} = 0.56 + 0.27 + 1.14 + 0.18 + 0.72 + 0.12 + 1.10 + 0.03 = 4.13\ W$$

Equation 119

Efficiency after losses at 50°C ambient temperature:

$$\eta_{Post} = P_{OutMax}/(P_{OutMax} + P_{losses}) \quad \Rightarrow \quad \eta_{Post} = 17\,W/(17\,W + 4.13\,W) = 80.46\%$$

Equation 120

7.12 CoolSET™/MOSFET temperature

CoolSET™/MOSFET temperature:

$$\Delta T = R_{thJA_As} \times P_{MOS} \quad \Rightarrow \quad \Delta T = 65\frac{K}{W} \times 1.11W = 72°K$$

Equation 121

Assumed junction-to-ambient thermal impedance (**include copper pour**)	R_{thJA_As}	65 K/W

$$T_{jmax} = \Delta T + T_{amax} \quad \Rightarrow \quad T_{jmax} = 71 + 50 = 121°C$$

Equation 122

7.13 Output regulation (non-isolated)

Setting resistor dividers for two non-isolated outputs:

Error amplifier reference voltage	V_{ERR_REF}	1.8 V
Weighted regulation factor of V_{Out1}	W_1	73 percent
Select voltage divider R11		39 kΩ
$R153 = \frac{V_{Out1} - V_{ERR_REF}}{W_1 \times V_{ERR_REF}/R11}$	⇒	$R153 = \frac{15\,V - 1.8\,V}{73\% \times 1.8\,V/39\,k\Omega} = 392\,k\Omega$
Select voltage divider R153	R153	390 kΩ

Equation 123

Setting resistor dividers for two non-isolated outputs:

$R103 = \frac{V_{Out2} - V_{ERR_REF}}{\frac{V_{ERR_REF}}{R11} _ \frac{V_{Out1} - V_{ERR_REF}}{R153}}$	⇒	$R103 = \frac{5\,V - 1.8\,V}{\frac{1.8\,V}{39\,k\Omega} - \frac{15\,V - 1.8\,V}{390\,k\Omega}} = 260\,k\Omega$
Select voltage divider R_{103}	R103	260 kΩ

Equation 124

7.14 Line OVP

The voltage divider resistors RI1 (R3A+R3B+R3C) and RI2 (R7) can be used to define the line OVP and brownout of the system.

R7 Value for Line OVP:

User defined VLine_OVP_AC value:	$V_{Line_OVP_AC}$	320 V
V_{VIN_LOVP} Value from datasheet:	V_{VIN_LOVP}	2.85 V
Selected R_{I1} (R_{3A}+R_{3B}+R_{3C}) Value:	R_{I1}	9 MΩ
$R_{I2} > \frac{R_{I1} \times V_{VIN_LOVP}}{(V_{Line_OVP_AC} \times \sqrt{2}) - V_{VIN_LOVP}}$	⇒	$R_7 > \frac{9 \times 10^9 \times 2.85}{(320 \times \sqrt{2}) - 2.85} = 57.0\,k\Omega$
Select voltage divider R7	R7	58.3 kΩ

Equation 125

References

[1] Infineon Technologies AG: *ICE5xRxxxxAG-1 datasheet*; Available online

[2] Infineon Technologies AG*: CoolSET™ 5th Generation Plus Calculation tool for Fixed-Frequency flyback*; Available online

Design support

Developer community

For a wider discussion with peers from industry to trade ideas regarding Infineon products, we welcome you to actively participate on the Infineon Developer Community.

Technical support

Have technical queries? Consult experts from Infineon to get a fast turn-around by raising a request on the Technical Support page or a local sales representative.

Revision history

Document revision	Date	Description of changes
V 1.0	2025-06-04	Initial release

Trademarks
All referenced product or service names and trademarks are the property of their respective owners.

Edition 2025-06-04

Published by

Infineon Technologies AG

81726 Munich, Germany

© 2025 Infineon Technologies AG. All Rights Reserved.

Do you have a question about this document?

Email: erratum@infineon.com

Document reference

DG104758

Important notice

The information contained in this application note is given as a hint for the implementation of the product only and shall in no event be regarded as a description or warranty of a certain functionality, condition or quality of the product. Before implementation of the product, the recipient of this application note must verify any function and other technical information given herein in the real application. Infineon Technologies hereby disclaims any and all warranties and liabilities of any kind (including without limitation warranties of non-infringement of intellectual property rights of any third party) with respect to any and all information given in this application note.

The data contained in this document is exclusively intended for technically trained staff. It is the responsibility of customer's technical departments to evaluate the suitability of the product for the intended application and the completeness of the product information given in this document with respect to such application.

Warnings

Due to technical requirements products may contain dangerous substances. For information on the types in question please contact your nearest Infineon Technologies office.

Except as otherwise explicitly approved by Infineon Technologies in a written document signed by authorized representatives of Infineon Technologies, Infineon Technologies' products may not be used in any applications where a failure of the product or any consequences of the use thereof can reasonably be expected to result in personal injury.