Power Solutions for ALTERA FPGAs & SoCs

Wide Selection of DC/DC power products for FPGAs

Infineon has a wide range of DC/DC power products for Altera FPGA/SoC families: Stratix, Arria, Cyclone, MAX.

Shown below is a design for Arria V, 10W-12W highlighting Infineon's Analog SupIRBucks with Integrated FETs.

Altera - Arria V
10W to 12W

HIGHLIGHTS

Only 2 device types needed for 4 outputs, includes all FETs:

IR3892 Dual 6A + 6A POL
Space saving package for two full regulators with integrated FETs
- Device 1: Core voltage and SERDES, Single resistor changes Vcore from 0.9V/0.95A/1V/1.1V
- Device 2: Low ripple Regulator for SERDES PLL, Platform voltages

IR3823 3A Single POL for peripheral voltages

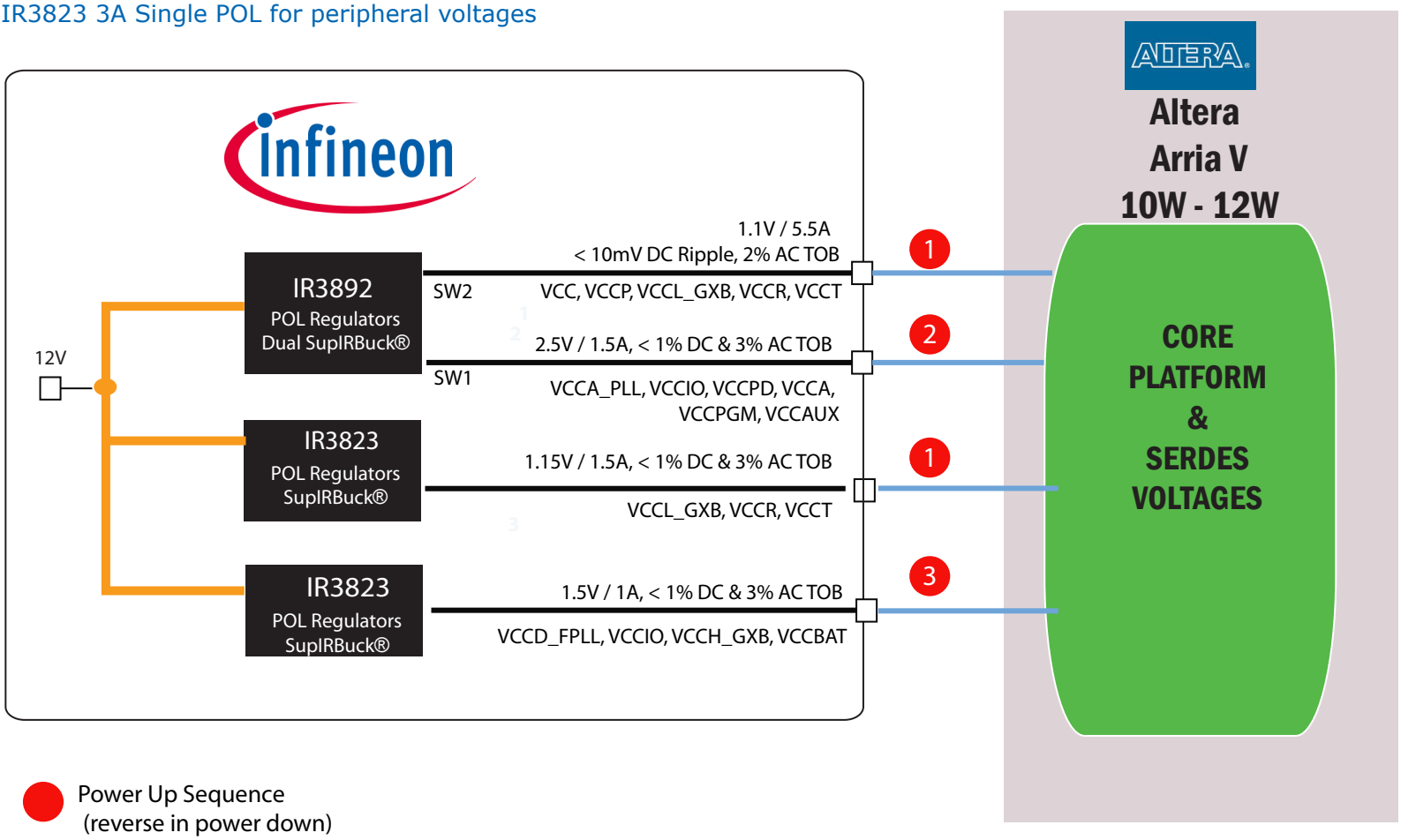

Power Up Sequence
(reverse in power down)

Power Solutions for Altera FPGAs & SoCs

Altera - Arria V
10W to 12W

EVALUATION BOARDS AVAILABLE

Part	Evaluation Board
IR3892	IRDC3892
IR3823	IRDC3823

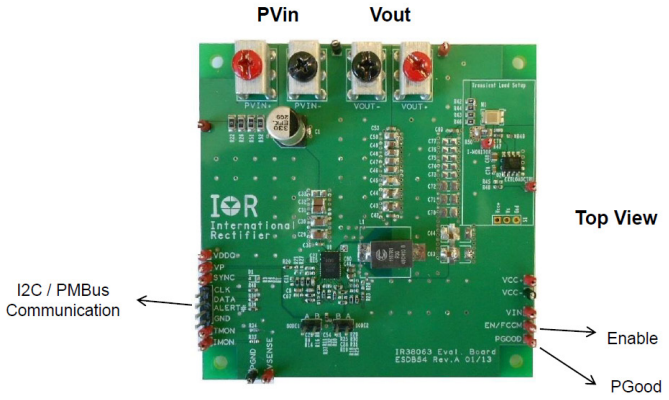

DC/DC Products - All Altera FPGAs

	MAX	Cyclone	Arria	Stratix
Core Voltage	Analog: IR3823 IR3883 New	Analog: IR3823 IR3891 IR3883 New PMIC: IRPS5401 Q4'16	MP-Digital: IR38204 Analog: IR3899 IR3898 IR3897 IR3823 Digital: IR38060 IR38062 IR38063 IR38064 IR38263 Q3'16 PMIC: IRPS5401 Q4'16	MP-Digital: IR38204 Analog: IR3847 IR3848 Digital: IR38060 IR38063 IR38064 IR38263 Q4'16 PMIC: IRPS5401 Q4'16
Platform Voltages			Analog: IR3899 IR3898 IR3897 IR3892 IR3891 Digital: IR38060	Analog: IR3892 IR3891 IR3899 IR3894 IR3895
SERDES Voltages			Analog: IR3897 IR3892 IR3891 IR3823 Digital: IR38060 IR38062	Analog: IR3847 IR3846 IR3894 IR3895 Digital: IR38060 IR38062 IR38063
Peripheral Voltages			Analog IR3883 New IR3823	Analog IR3883 New IR3899 IR3894