Infineon Power Solution for Altera
Arria 10
10AX16 / 10AS16 GX160 / SX160
10AX22 / 10AS22 GX220 / SX220
10AX27 / 10AS27 GX270 / SX270
20W to 28W

Zynq	Iout	Powerstage	Desc	Bias	Inductor L1	Cout1	Cout2
Zu05	16A	IR3742	PowIRstage® 5x6 - 20A	12V	TDK 200nH (VLB10050HT-R20M)	1x470uF	4 to 6x22uF

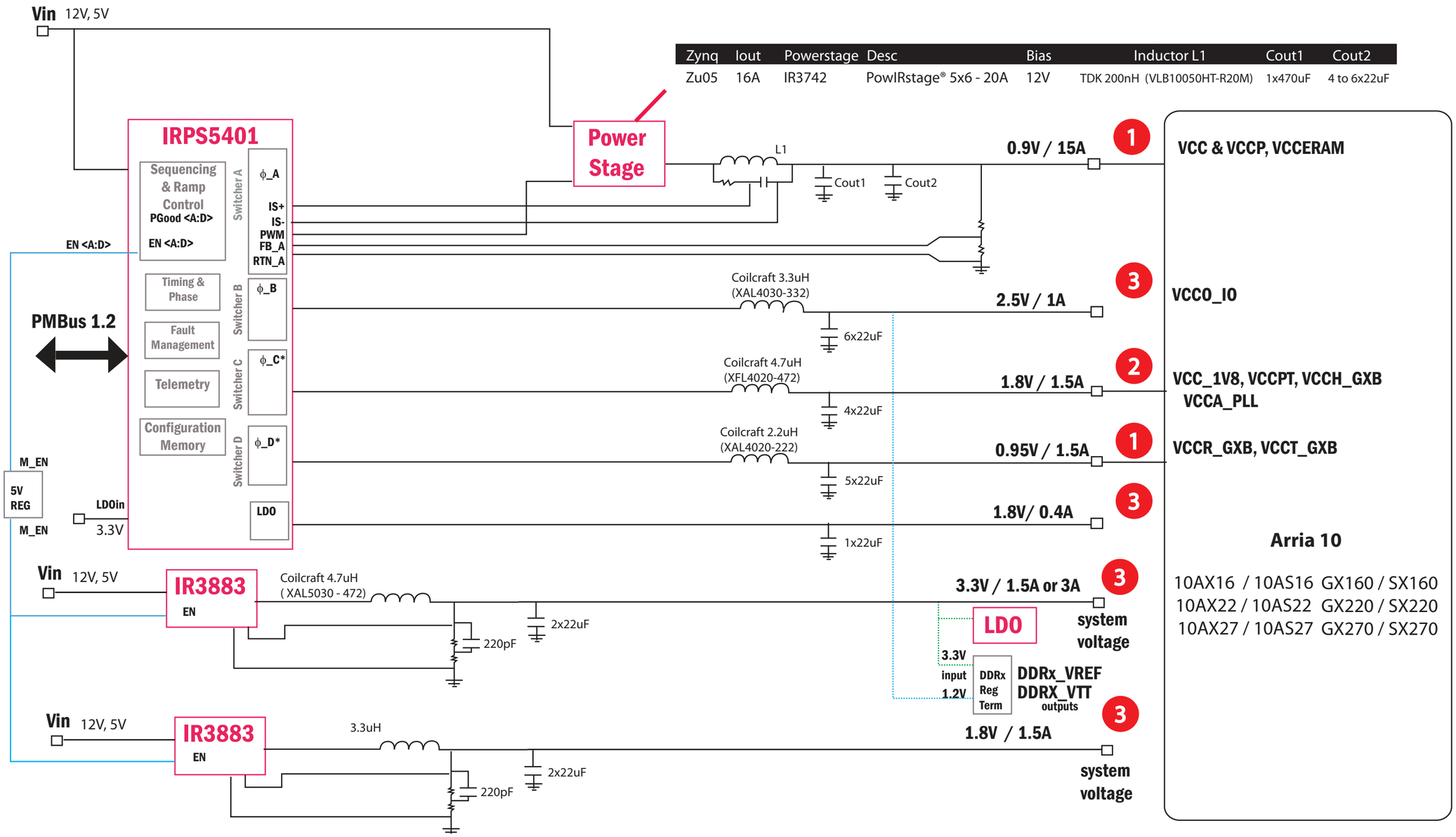

On start up condition of VCC and PVin and an external master enable (M_EN), Power sequencing can be adjusted by ton_delay and toff_delay in 1ms increments from 0ms to 127ms for each regulator.

Power up sequence (ton_delay)



Power down sequence (toff_delay)



Power sequencing initiated by 5V Enable/Disabled to all IRPS5401's
All regulators and LDO is turned on/off via
internal settable timers integrated
into the IRPS5401 PMICs.
No external sequencing components are required.
Power Off is the reverse order.

PCB space estimates:
IRPS5401 with Power Stage + L's, C's : 35mm x 40mm
IRPS5401 without Power Stage + L's, C's: 30mm x 30mm
IR3883 with L, C's : 15mm x 10mm