Multilevel 3-Phase Rectifier for Increasing AI Server PSU Output Power in Data Centers

5LANPC topology for high efficiency at high power density by reduction of passive components

The rise of artificial intelligence (AI) has resulted in a significant increase in power demand in data centers, with AI server racks power levels expected to reach MW range. Accordingly, the server rack architecture will evolve to separated IT rack and sidecar power rack, as shown in Figure1.

By the System Solutions Boards Team: David Meneses, Principal System Application Engineer, and Alex Rossi, Staff System Application Engineer; all at Infineon Technologies

This separation allows the PSU in the sidecar power rack to increase its power up to ranges far exceeding the tolerance of the IT sidecar, reaching even 30 kW with 3-phase AC input and high voltage DC (HVDC) output.

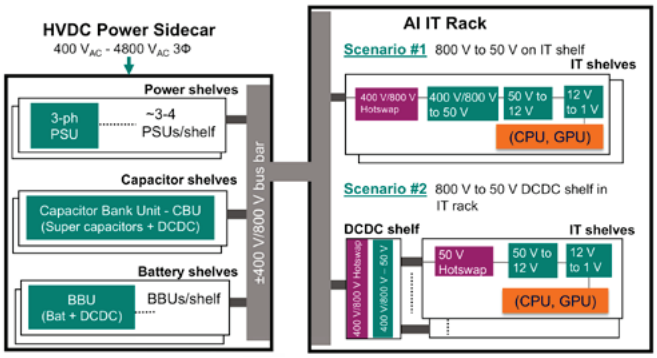

Figure 1: Next generation AI server rack architecture.

Since the input voltage for the PSU reaches 3-phase territory, it is natural that the PSU's topologies also need to change accordingly. The T-type Vienna rectifier is a well-known 3-phase rectifier topology in industrial applications (Figure 2, right), which can be used in these PSUs as well. In the T-type Vienna rectifier, A-An and B-Bn are modulated during the AC's positive and negative respectively at a high switching frequency. Therefore, a 3-level voltage (DC/0 V/-DC) with a switching frequency component is applied to the PFC choke switching node. To enable this, 1200 V switches are required for connecting the switching node to the DC rails, while 650 V devices are needed for the back-to-back switches implementation.

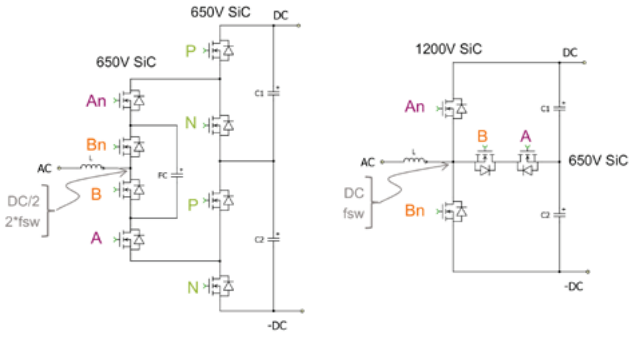

5LANPC PFC T-type Vienna Rectifier

Figure 2: 3-phase topologies for AI server power supplies.

However, in the search for higher powered PSUs, an emerging alternative for 3-phase rectifiers in AI server PSU is the 5-level active neutral point clamped (5LANPC) PFC, in which efficiency and power density are the key highlights. Figure 2 (left) presents the 5LANPC topology in which the stacked devices on the DC side (P/N) are switched according to the AC polarity. The flying capacitor (FC) component of the 5LANPC phasing the AC side implements 180 degrees out-of-phase PWM (A-An versus B-Bn) similar to a single-phase 3-level FC PFC. As a result, all the devices required for the topology implementation are rated for 650 V. In addition, the switching node voltage is half of each of the DC capacitor voltage, at double of the switching frequency. Therefore, the PFC choke volt-second is 4 times lower than that of the T-type Vienna PFC. The consequent size reduction, together with an expected performance improvement, makes the 5LANPC a very good topology for AI PSUs, which can be evaluated using the REF_18KW_HFHD_3P_PSU . The FC modulation in the 5LANPC choke provides a ripple reduction as well, which enables a reduction in the differential mode EMI filtering effort.

Choke and EMI component size comparison in 5LANPC and T-type Vienna

Figure 3 (top) presents the PFC choke current and ripple in a 5LANPC for 398 V L-L AC and ±445 V DC, with a switching frequency of 35 kHz and an output power of 18 kW. The choke is implemented using 2 cores CH270060GT with 28 turns and an AWG14 wire. This specific design is used as a base for comparison with the T-type converter.

The phase-shift modulation of the FC converter enables a ripple reduction effect and doubling the switching frequency in the inductor, which provides a maximum current ripple of around 8 A to be considered for the differential mode (DM) EMI design.

If the same choke is used in a T-type Vienna with 70 kHz switching frequency (same inductor frequency), the higher volt-second of the topology considerably increases the inductor current ripple, as well as core losses which jeopardize the performance, as described later in this article. The resulting maximum current ripple, as shown in Figure 3 (middle), considerably increases the DM EMI effort, which directly translates to a size increase as more capacitance or stray inductance is needed.

The design choice to reduce the inductor ripple, and to keep an EMI filter size similar to 5LANPC in the T-type converter, is to increase the PFC choke inductance. Figure 3 (bottom) shows the current ripple when double the number of cores are used in the T-type design, with the correspondent increase in PFC choke volume.

Therefore, it is clear that the lower volt-second of the 5LANPC, together with the ripple cancellation effect, provides a huge advantage in terms of size compared to the T-type Vienna – a smaller PFC choke with reduced differential-mode EMI filter effort. The size difference could then be used for more bulk capacitors, or for implementation of new cooling concepts, such as liquid cooling.

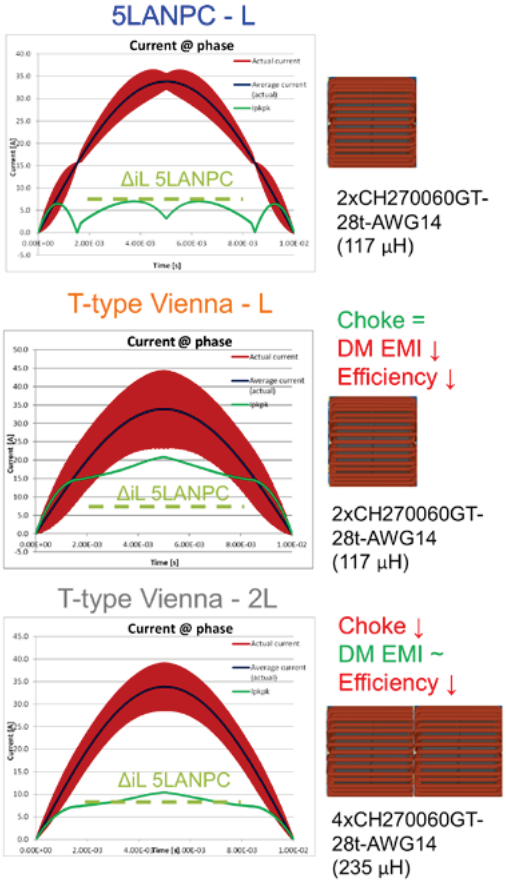

Figure 3: Choke size and current ripple comparison.

5LANPC and T-type Vienna performance comparison

Using the previous PFC choke designs and considering 10 mΩ on-resistance in the different devices used (paralleling of devices is only considered in the low-frequency MOSFETs of 5LANPC), the efficiency of the three different solutions have been estimated (Figure 4). The 5LANPC clearly outperforms the T-type Vienna designs, which are also expected to be bigger in volume either because of the PFC choke or the EMI filter.

Figure 4 also presents the loss breakdown of the three proposed designs for 18 kW operation (100% load). As seen, the inductor losses are the main contributor in the T-type Vienna designs. This is either because of considerably high core losses, or because of the increase in winding losses when trying to reduce the former.

This tendency is also expected in higher power designs, in which a single choke could still be implemented in 5LANPC. However, the T-type Vienna rectifier might benefit from the ripple cancellation effect of interleaving, and by splitting losses and the choke. Nevertheless, the choke losses and the size are issues to consider as well in interleaved solutions.

5LANPC control block diagram

Another benefit of the 5LANPC is that most of the control implementation of a 5LANPC is common to a T-type Vienna PFC, which reduces the complexity of redesigning. Figure 5 shows the block diagram of a DQ control for a 5LANPC. The blue colored blocks in Figure 5 are common for both topologies. Apart from PWM modulation, the main difference is the need of FC control loops, shown in orange in Figure 5.

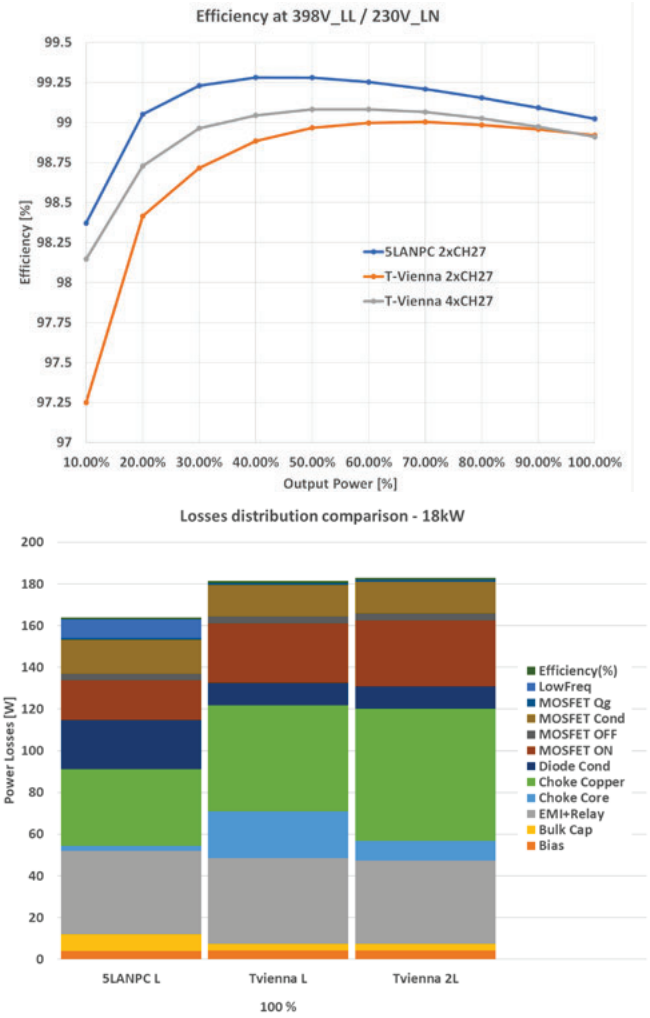

Figure 4: Efficiency comparison of T-type Vienna and 5LANPC and losses distribution for 18 kW operation.

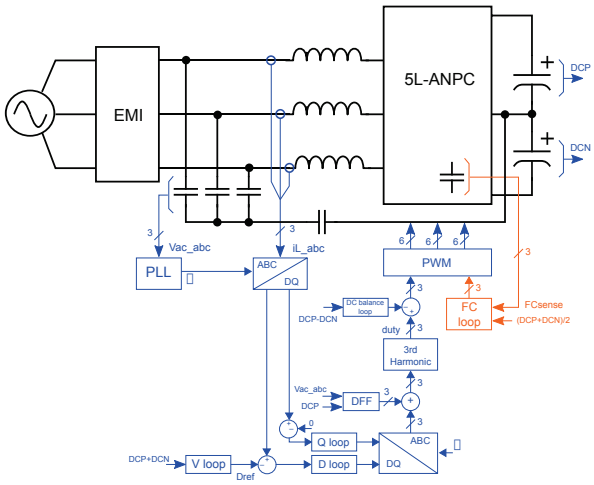

Figure 5: Control block diagram of 5LANPC.

Summary

The speed of AI advancements and their adoption will depend directly on the corresponding growth of data centers and the infrastructure that powers them. Therefore, for hardware designers of these critical systems, the 5LANPC multilevel converter offers advantages in performance and size, making the topology very attractive for AI server PSUs where efficiency and power density are key design parameters. To help with a faster design-to-launch of high-power AI PSUs, see Infineon's REF_18KW_HFHD_3P_PSU and other reference designs at www.infineon.com/aipsu.