SPONSORED CONTENT—CONSUMER & APPLIANCES

240-W Battery-Charging System for Portable Devices and Power Appliances Using USB-C PD

Universal and simplified, 2- to 12-cell battery-charging system design using Infineon's EZ-PD™ PMG1-B2

By Blesson Easo Varghese, applications engineer, and Robert Vartanian, lead principal engineer for EZ-PD™ PMG1 high-voltage microcontrollers, both at Infineon Technologies

Look around you and list out the first 10 electronic appliances that you see. Chances are very high that all 10 of them use a USB-C port, especially if they have been manufactured in the last two to three years. This widespread adoption of USB-C is not a fluke but by design because of the many technical advantages that USB-C provides.

In recent years, USB-C has evolved as the leading standard for wired data communication in electronic devices. The notable advantages of USB-C technology have led to the European Union (EU) Common Charger Directive from 2024, which mandates all new smartphones, tablets, and other portable electronics sold in the EU to be equipped with a USB Type-C port for charging.

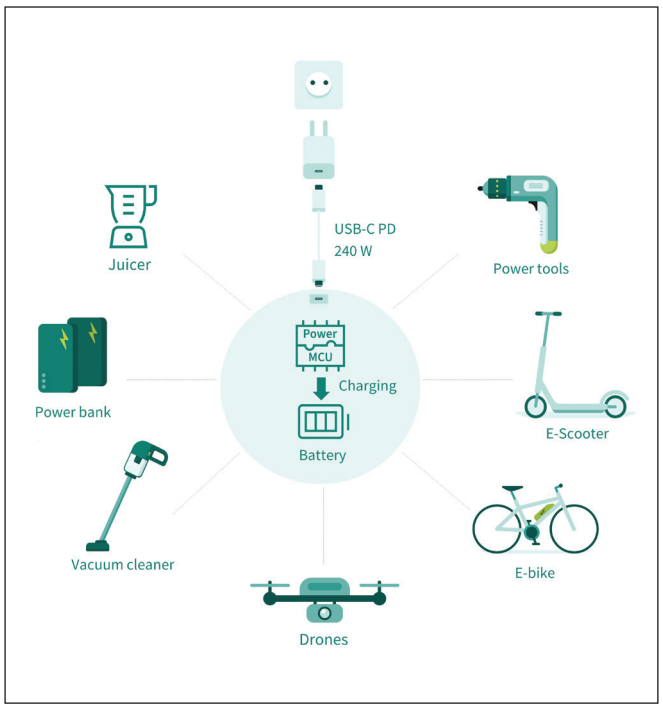

Figure 1: Some of the many USB-C battery-charging applications (Source: Infineon Technologies AG)

The EU Common Charger Directive from 2024 mandates that all new smartphones, tablets, and other portable electronics sold in the EU be equipped with a USB Type-C port for charging.

Conventionally, cordless appliances with batteries have used an external, fixed-voltage AC-to-DC barrel jack adapter to charge the battery. However, every such cordless appliance was supplied with an inbox-specific charger adapter using an AC power supply. When such appliances were no longer used, abandoned, or damaged, their charger adapter, which was incompatible with other devices, would also be abandoned. Therefore, this approach generated considerable e-waste, which adversely affected the environment.

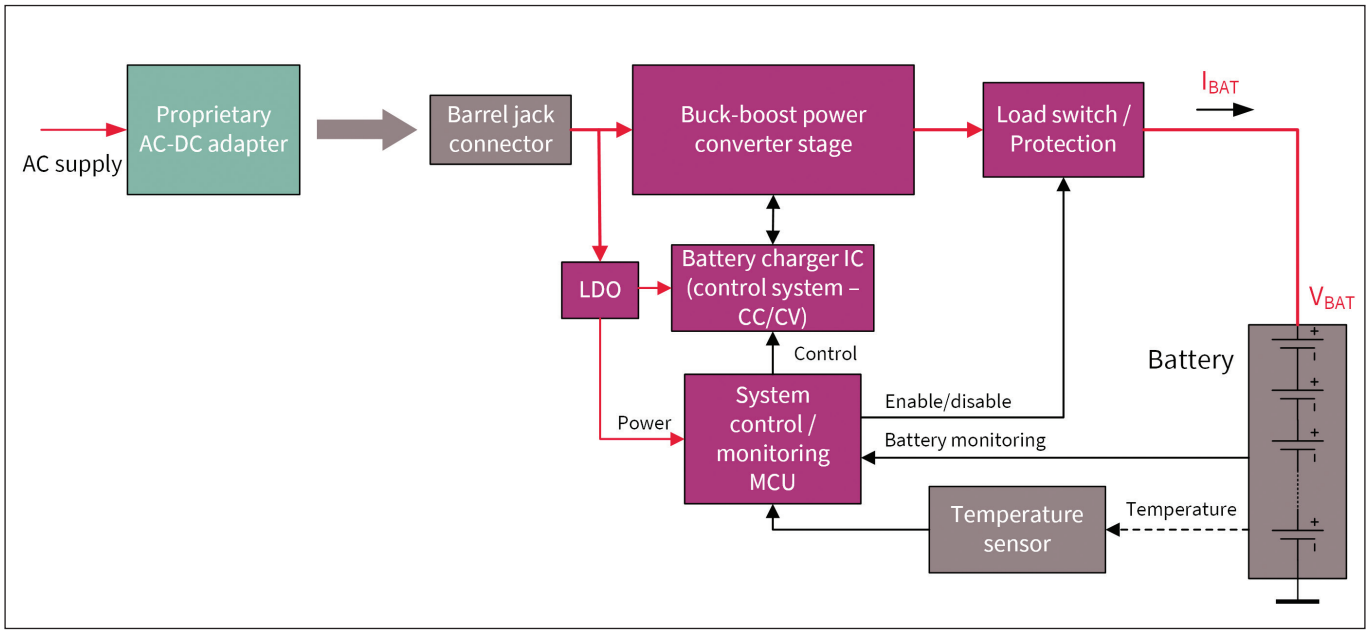

Figure 2: Traditional SMPS battery-charging system (Source: Infineon Technologies AG)

With the advancement in USB generations, USB has become an alternative option for powering consumer electronic gadgets and devices with up to 7.5 W of power in legacy USB protocols such as BC1.2. However, the power limitation of such legacy USB protocols made it impractical to use them for high-power systems such as power tools, vacuum cleaners, portable mixers, and e-bikes, which often require higher power.

Today, the problem is simplified by the introduction of USB Type-C and Power Delivery (PD) protocols. USB Type-C ports that require more than 15 W of power (5 V at 3 A) support the USB-PD protocol. With the latest USB-PD specification V3.2, USB Type-C ports can handle up to 240 W of power (48 V at 5 A). The higher power capability has helped scale up the range of battery-charging applications that can be supported by the USB-PD protocol.

USB-PD IN A NUTSHELL

USB-PD is a power negotiation protocol supported by two devices with a USB Type-C port when connected using a Type-C cable. This enables the devices to act in two possible modes: as a power

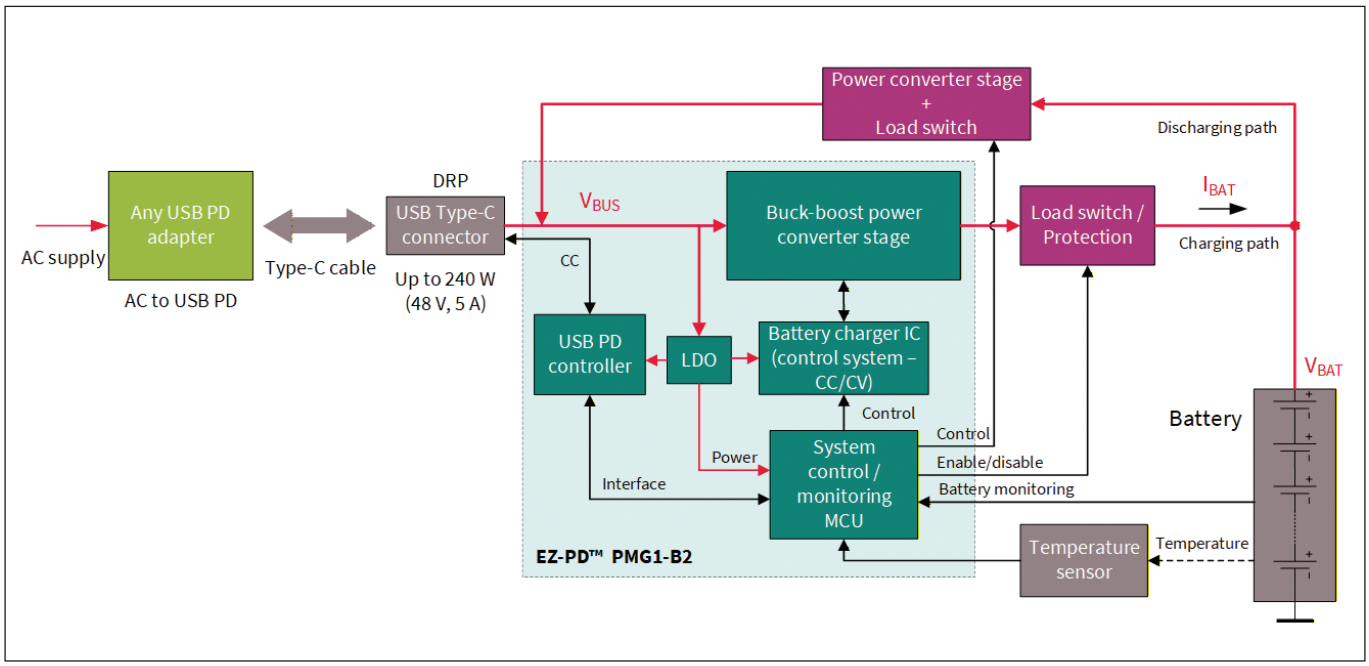

Figure 3: USB-C PD battery-charging system (Source: Infineon Technologies AG)

source (PD source) or a power sink (PD sink). The PD source here often refers to an AC-to-DC universal adapter, which converts the AC supply to variable DC power available at its Type-C port. The PD sink refers to any device that would consume DC power from a Type-C port, which may be used to power itself or to charge a battery.

On connecting a PD source and a PD sink device through a Type-C cable, they will negotiate power using the USB-PD protocol. The PD sink device requests power (in terms of voltage and current) to meet its system demand, and the PD source caters to the specific power requirement by adjusting its output supply voltage and current using its internal regulator. A USB Type-C port that supports below 100 W is termed a Standard Power Range (SPR) port, and the one supporting above 100 W and up to 240 W is termed an Extended Power Range (EPR) port.

Battery charging via USB-C PD offers several advantages over a traditional charging system. This is because USB-C PD provides a universality to the power source by making it independent of device specifications.

DIFFERENCE IN CHARGING SYSTEM ARCHITECTURES

A traditional battery-charging system (Figure 2) uses an external AC-to-DC power adapter along with a DC battery-charging unit. Here, the AC-to-DC power conversion stage must be designed specifically for the application, based on system needs. Connectors such as barrel jacks used in such systems may not be compatible with any other device. Therefore, end products with battery-charging systems had to be sold with proprietary inbox chargers. This led to an increase in the bill of materials (BOM), thereby leading to higher cost and e-waste.

Battery charging via USB-C PD (Figure 3) offers several advantages over a traditional charging system. This is because USB-C PD provides a universality to the power source by making it independent of device specifications. In particular, the power source is an AC-to-USB-C source that can modify its output DC voltage and built-in protection thresholds based on the needs of the connected device.

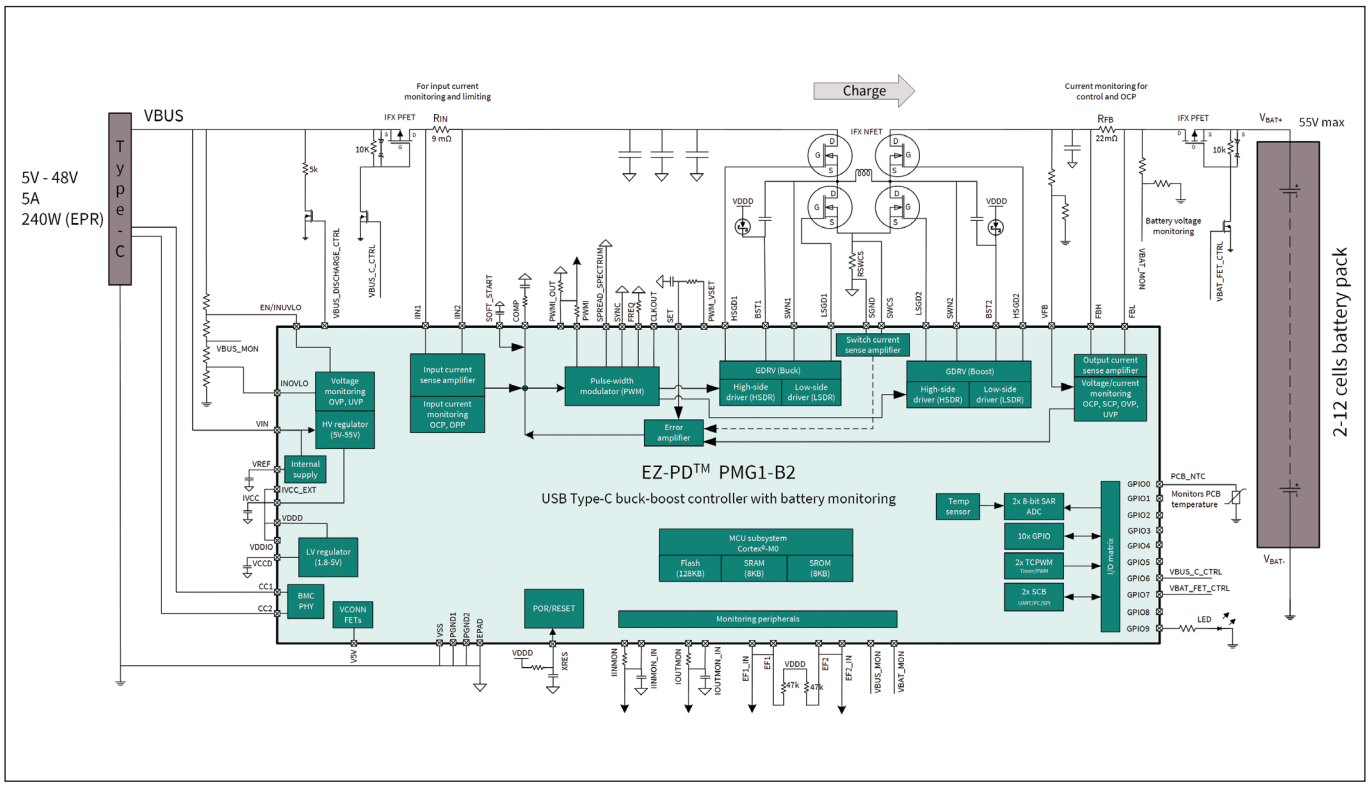

Figure 4: EZ-PD™ PMG1-B2-based 2- to 12-cell Li-ion battery-charging system (Source: Infineon Technologies AG)

Another feature provided by USB-PD is the Dual-Role Power (DRP) capability of the device. It means that the same USB Type-C port on the device can be used as a power sink to charge a battery and as a power source to power external devices that are connected to the port. Therefore, a USB-PD integrated battery-charging system uses standardized specifications, connectors, and power sources, thereby providing interoperability between various USB-PD devices.

However, while adopting USB-C PD technology eliminates the need for inbox chargers, addressing the potential tradeoffs is essential. Introducing a USB-PD controller into an existing system increases the total BOM for the battery-charger system. Therefore, having an integrated solution is ideal for reducing the board size and the BOM cost.

Infineon's EZ-PD™ PMG1-B2 IC encapsulates all of the highlighted blocks into a single chip, thereby offering the potential to harmonize performance, efficiency, board size, and cost-effectiveness seamlessly for applications requiring up to 240 W of power.

EZ-PD™ PMG1-B2: 2- TO 12-CELL BATTERY-CHARGING CONTROLLER WITH USB-C PD MCU

EZ-PD™ PMG1-B2 is a highly integrated system-in-package consisting of a USB-C PD solution with an integrated buck-boost controller for 2S to 12S lithium-ion (Li-ion) battery charging. It complies with the latest USB-C and PD specifications and supports a wide input voltage range (4.5 V to 55 V) with programmable switching frequencies (200 kHz to 700 kHz).

Its 32-bit Arm® Cortex®-M0 processor, 128-kB flash, and 8-kB SRAM, along with various analog and digital peripherals such as ADCs, PWMs, timers, serial communication blocks, and integrated N-FET gate drivers, make it highly configurable. It also contains a 48-V to 5-V LDO to power internal logic blocks directly from Type-C VBUS, thereby eliminating the need for an external low-voltage power supply.

The internal PD subsystem has a BMC transceiver to handle USB-PD communication. The buck-boost controller block integrates 4× N-FET gate drivers and an analog control loop to regulate the output current for battery charging. It also contains current-sense amplifier blocks for monitoring input, output, and inductor currents.

The MCU contains 2× SAR ADCs for monitoring the battery voltage and charge current while charging. The device also provides hardware-based fault protections at both output and input to ensure system and battery safety.

CONFIGURABLE BATTERY-CHARGING ALGORITHM

The battery-charging algorithm aims to optimize the charging time by ensuring the maximum capacity utilization and preventing any damage to the battery for its longevity. Charging modes and profiles are specific to battery types. Today, Li-ion is the most used battery type due to its high charge density, but it is vulnerable to overcharging, overvoltage, and undervoltage.

Batteries vary based on the battery chemistry, number of cells, arrangement of cells, charge current rating, cell voltage range, and thermal behavior. To charge different battery types, the charger must comply with the battery specifications.

Optimally, Li-ion batteries must be initially charged with constant current by monitoring the state of charge. When the battery is almost charged, constant-voltage charging maximizes charge buildup until the current reduces to zero.

EZ-PD™ PMG1-B2 offers fully programmable charging modes:

- Pre-charging: Charging a critically low battery when the battery's internal resistance is higher (here, low-current charging is preferred to prevent battery overheating, which can cause thermal damage)
- Normal charging: Charging in constant-current mode with multiple current cycles to raise the battery voltage to the maximum level
- Top-off charging: Enabled for a predetermined time

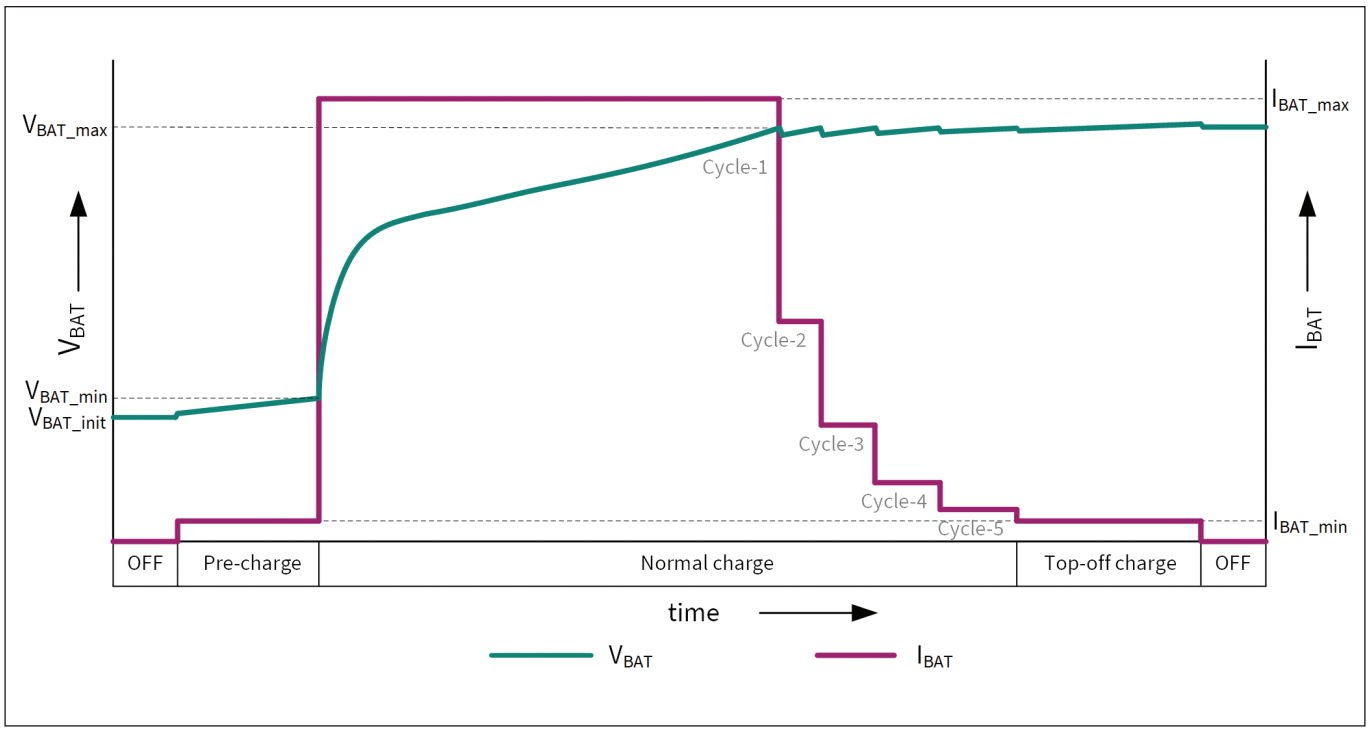

Figure 5: Battery-charging modes and charging profile (Source: Infineon Technologies AG)

by supplying a very low current to help the battery hold charge to full capacity by compensating for self-discharge or leakage current

EZ-PD™ PMG1-B2 monitors the battery voltage and charging current throughout the charging process, using the internal 8-bit SAR ADC to ensure protection.

The output also has hardware-based overvoltage and short-circuit protection features to instantly react to the faulty conditions, such as overvoltage at the battery terminal. All critical-fault responses have redundancies in hardware and firmware. Additionally, the firmware runs timers for each charging mode to limit their maximum time. This helps to prevent indefinitely charging a faulty battery and overcharging a full battery.

CONFIGURING BATTERY-CHARGING PARAMETERS

Batteries vary based on the battery chemistry, number of cells, arrangement of cells, charge current rating, cell voltage range, and thermal behavior. To charge different battery types, the charger must comply with the battery specifications.

EZ-PD™ PMG1-B2 is a programmable battery charger, and it offers configurability in several important battery-charging parameters. This feature enables the EZ-PD™ PMG1-B2-based battery charger to support battery packs of different chemistries, cell counts, and power levels.

The USB-C PD feature enables the system to negotiate the appropriate power contract to best suit the charging power requirement of the battery. The software can be easily configured to meet the exact needs of the battery using the configurator GUIs available in the software development package:

- Number of battery cells (2 to 12 for Li-ion)
- Maximum charging current limit (based on the battery specification)
- Charging modes and safety timers (charging profile)
- Individual cell voltage range (based on battery chemistry)
- Overvoltage- and undervoltage-protection thresholds
- Charging overcurrent-protection thresholds
- Thermal-protection thresholds
- USB-PD contract voltage and current limits (up to 48 V, 5 A)

Visit ***www.infineon.com/PMG1-B2*** or download the ***datasheet*** for more information.