COVER STORY

Simplifying Motor Control for Drones with ESC Reference Design

Infineon's REF_ESC_48V_80A_FOC is an out-of-the-box, 24- to 60-V drone motor ESC reference design with full software support.

By Christian Schoeffmann, staff engineer, and Nenad Belancic, global application manager for robotics, both at Infineon Technologies

Drones are becoming enormously popular, providing an affordable, efficient solution to many requirements across different industries, as well as enabling a thriving consumer sector. They are used for a wide range of applications, with advances in technology regularly opening up new use cases.

The terms "multicopters," "unmanned aerial vehicles," and "drones" are often used interchangeably—in this article, we'll just refer to drones. Widely different sizes, speeds, and ranges are available, from tiny consumer models weighing less than a kilogram up to powerful tiltwings that can achieve speeds of 350 km/h with a range of up to 300 km.

Drones are a fast-growing market. Figure 1 shows the predicted rise in shipments over the next few years, from 2025 to 2031.

In this article, we will look at the electronics

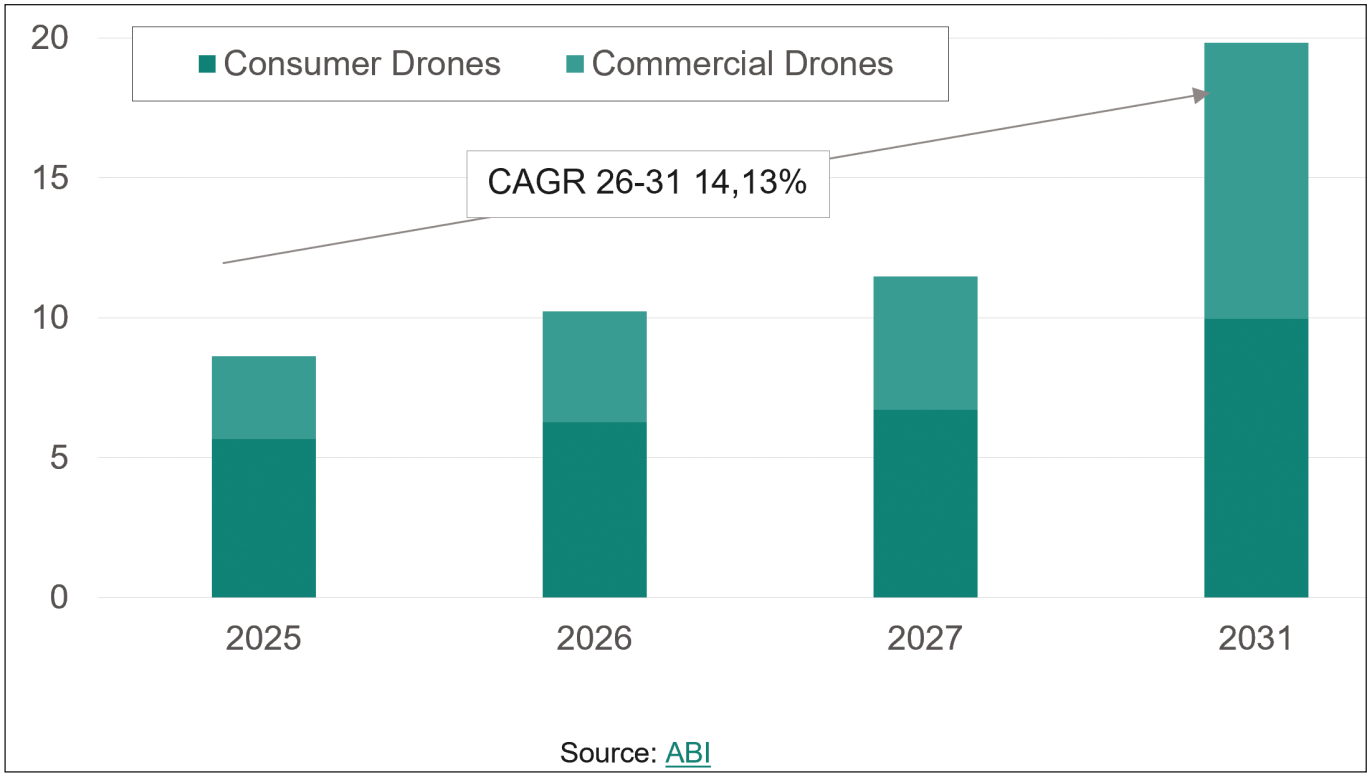

Figure 1: The worldwide market for consumer and commercial drones, as measured by units shipped (in millions) (Source: ABI Research)

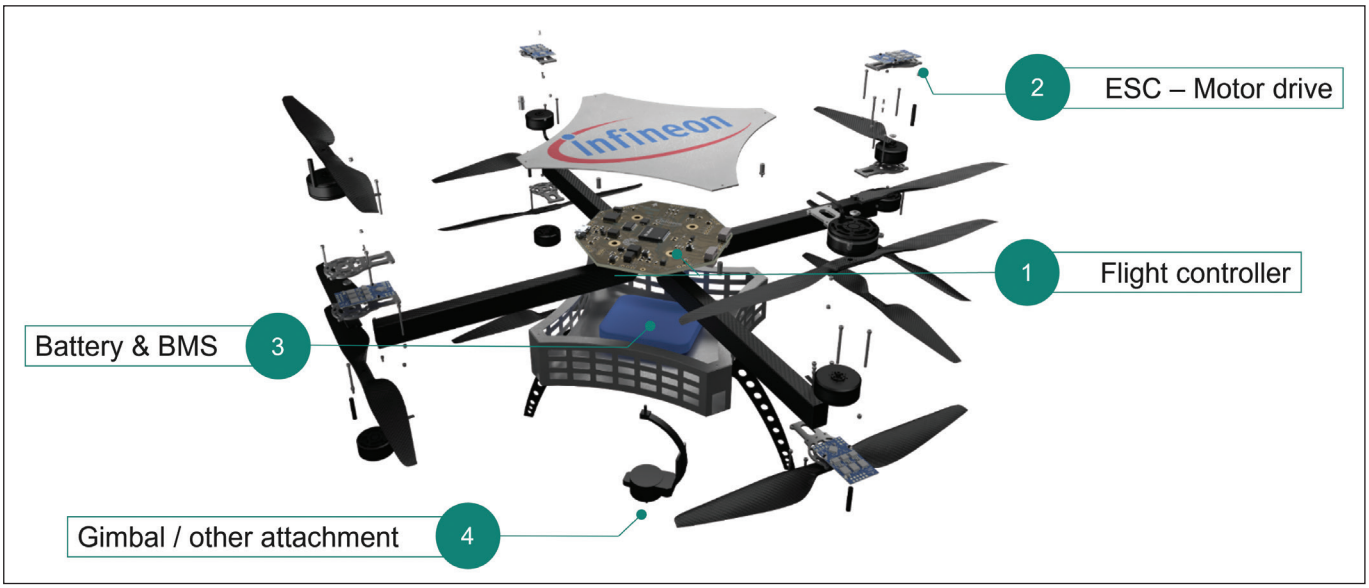

Figure 2: The functional blocks of a drone, including battery and BMS, ESC, gimbal, and flight controller (Source: Infineon Technologies AG)

technology in today's drones and focus on how solutions for the drone's electronic speed controller (ESC) can play a key role in simplifying motor control.

DRONE TECHNOLOGY

Today's drones are highly sophisticated, combining state-of-the-art electronics with advanced aerospace engineering, all in a compact, lightweight package.

Figure 2 shows the key functional blocks of the electronics systems in a modern drone. The flight controller is the "brain" of the drone, taking inputs from multiple sensors and instructions from the human pilot and calculating what instructions it needs to send to each ESC. Conventional drives have a separate ESC for each motor.

Each ESC takes these instructions and translates them into the signals to send to the appropriate motor. All of the electronics are, of course, battery-powered, with a battery management system (BMS) ensuring that sufficient power is available and that the drone's pilot is aware of the remaining range.

Finally, the gimbal is a stabilization system for a camera or other payload that uses electric motors to move the payload on multiple axes, ensuring it remains stable regardless of drone motion or vibration.

ESC IN DRONES EXPLAINED

Let's look at the ESC in more detail and how it controls the drone's motors.

An ESC includes several key components:

- A microcontroller (MCU) interprets the signals provided by the flight controller, as well as data on the motor's position. Based on this information, it then sends out pulses to the gate driver.
- Gate drivers take the low-voltage signal from the MCU, amplify it, and deliver it to the MOSFETs.
- MOSFETs, the electronic switches, provide power to the electric motor to control its speed and direction.
- Current sensing provides feedback for precise motor control.

The flight controller is the 'brain' of the drone, taking inputs from multiple sensors and instructions from the human pilot and calculating what instructions it needs to send to each ESC. Conventional drives have a separate ESC for each motor.

A drone typically uses a brushless DC (BLDC) electric motor. The signal provided by the MOSFETs is switched rapidly between high and low, which switches the phases of the motor's coil and thus spins its rotor.

There are different protocols that can be used to

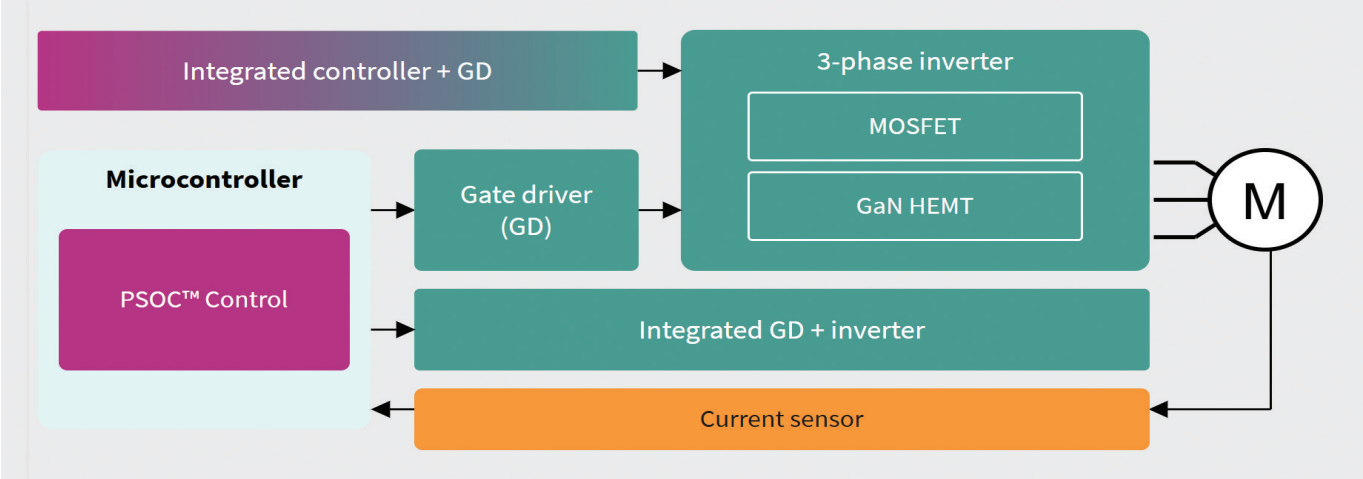

Figure 3: Key components for motor control, including the MCU, gate driver, MOSFETs, and sensing (Source: Infineon Technologies AG)

In some designs, there are no separate sensors, and the ESC determines the motor's position based on the 'back EMF' voltage induced in the motor's stator windings. Alternatively, Hall-effect sensors can be used to directly determine the motor position.

determine the exact format of the pulsed signal sent from the MOSFETs to the motor. One of the simplest is pulse-width modulation: An "on" pulse, or high-voltage signal, delivers power to the motor, while an "off" period means no power is delivered. This means that the width of the pulses (in time) determines the speed of the motor. Other protocols commonly used with drones include Dshot and CAN, which are both able to provide resilient digital communication that can improve drone performance and provide new features.

HOW INFINEON'S ESC SIMPLIFIES DRONE DESIGN

Figure 3 shows how the key blocks of the ESC are linked together, with the MCU providing signals to the gate driver, which in turn sends a signal to the MOSFETs (here arranged in a three-phase inverter). The output from the MOSFETs then controls the motor.

This diagram also shows sensors providing feedback to the MCU on the motor's position to maximize accurate control of a BLDC motor. In some designs, there are no separate sensors, and the ESC determines the motor's position based on the "back EMF" voltage induced in the motor's stator windings. Alternatively, Hall-effect sensors can be used to directly determine the motor position.

In one example of a real-world application, Indian tech startup Reflex Drive selected Infineon's ***OptiMOS™*** 80 V and 100 V power MOSFETs for its drone ESCs (Figure 4). This enabled Reflex Drive's ESCs to achieve good thermal management and high efficiency, which enables high power density.

The ESCs can also include Infineon's ***MOTIX™ IMD701*** controller solution, which combines an MCU and a gate driver IC to provide precise, reliable motor control. This enables improved drone performance, greater reliability, and longer flight times.

Reflex Drive's ESCs use sensorless field-oriented

KEY COMPONENTS			
MCU	**Gate Driver**	**Power Switches**	**Sensing**
PSOC™ Control	EiceDRIVER™ or MOTIX™	OptiMOS™ & StrongIRFET™ CoolGaN™	XENSIV™ Magnetic Position Sensors XENSIV™ Current Sensors

Table 1: Infineon components for each of the key functional blocks for motor control (Source: Infineon Technologies AG)

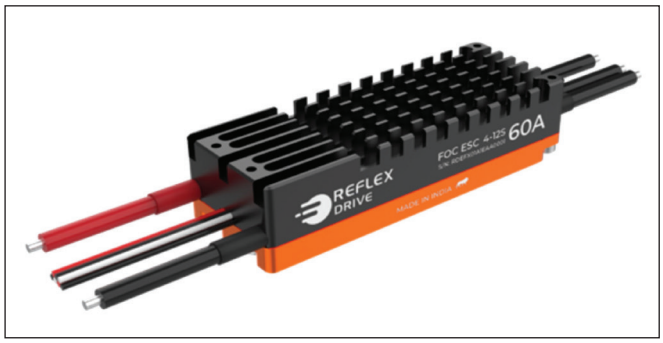

Figure 4: Reflex Drive drone ESC using Infineon's OptiMOS™ 80 V and 100 V power MOSFETs (Source: Reflex Drive)

control (FOC) to improve motor efficiency and precise control. The ESCs weigh only 180 g yet can deliver a continuous power output of 3.8 kW. This makes them suitable for motors delivering thrust of 15 to 20 kg, used in drone applications such as agricultural spraying, seed dispersal, and small-scale logistics.

FIRST MASS-MARKET USABLE OUT-OF-THE-BOX ESC SOLUTION

To simplify development and reduce time to market, Infineon has developed an out-of-the-box reference design for ESCs in drone motor drives, with full

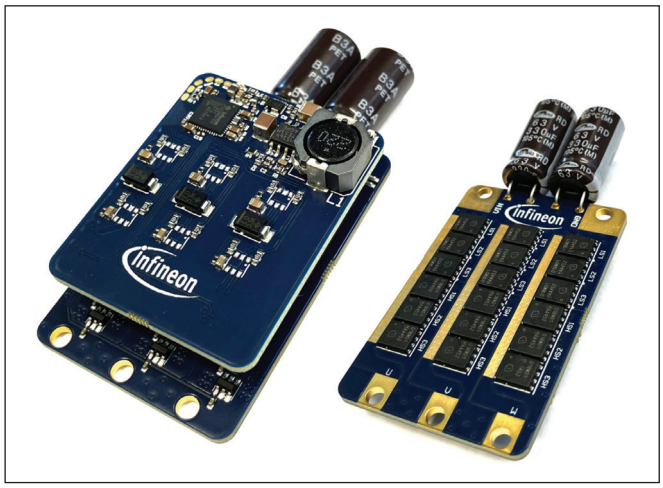

Figure 5: The reference design for drone motor drives showing the power board (left) and fully assembled board (right) (Source: Infineon Technologies AG)

open-source software support. The system, called ***REF_ESC_48V_80A_FOC***, is Infineon's first silicon-based drone motor drive reference design.

The reference design consists of two boards, a logic (or control) board and a power board in a stacked arrangement, as shown in Figure 5. It is based on the high-performance PSOC™ Control C3 MCU, which is

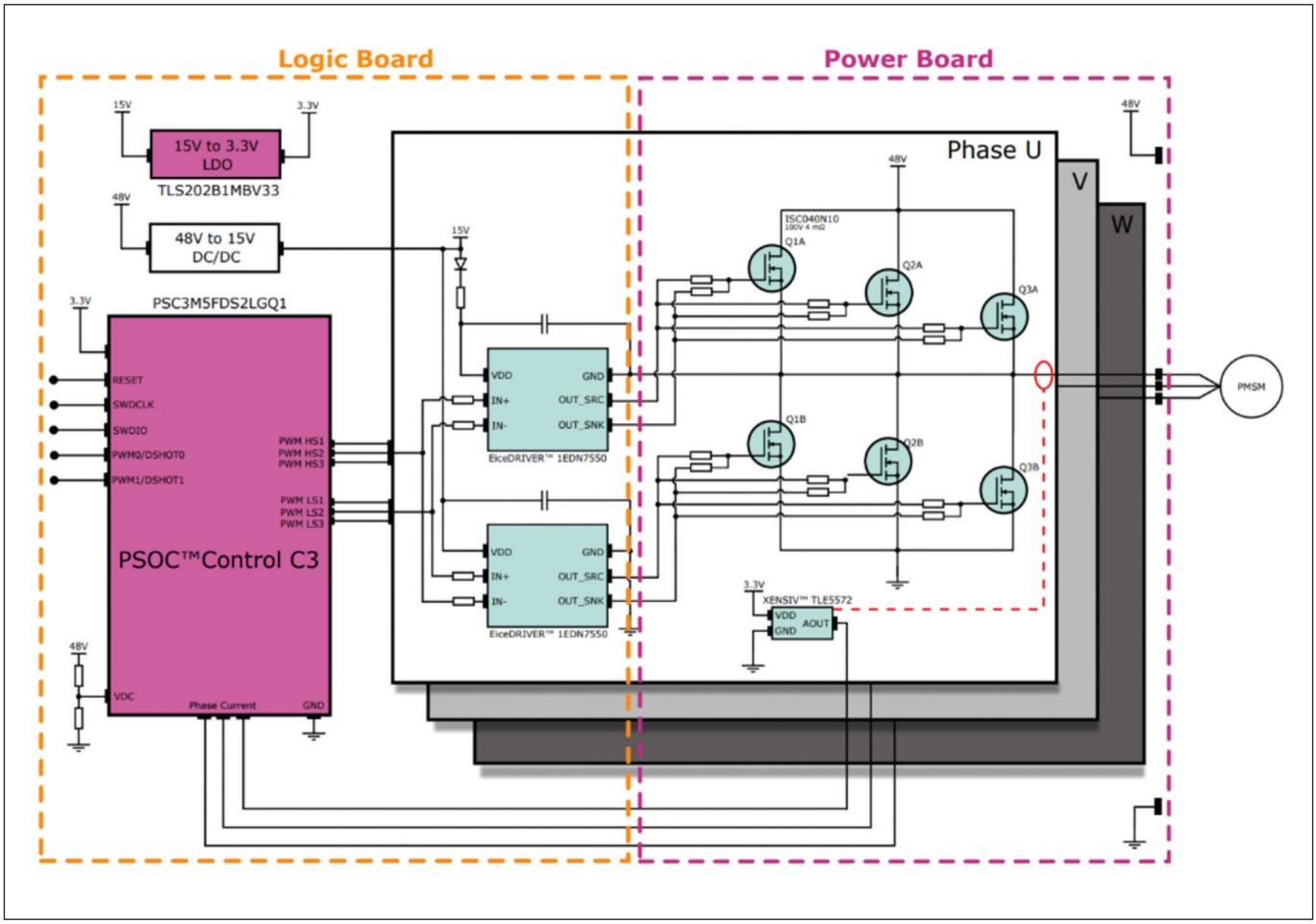

Figure 6: A block diagram of the drone motor drive reference design (Source: Infineon Technologies AG)

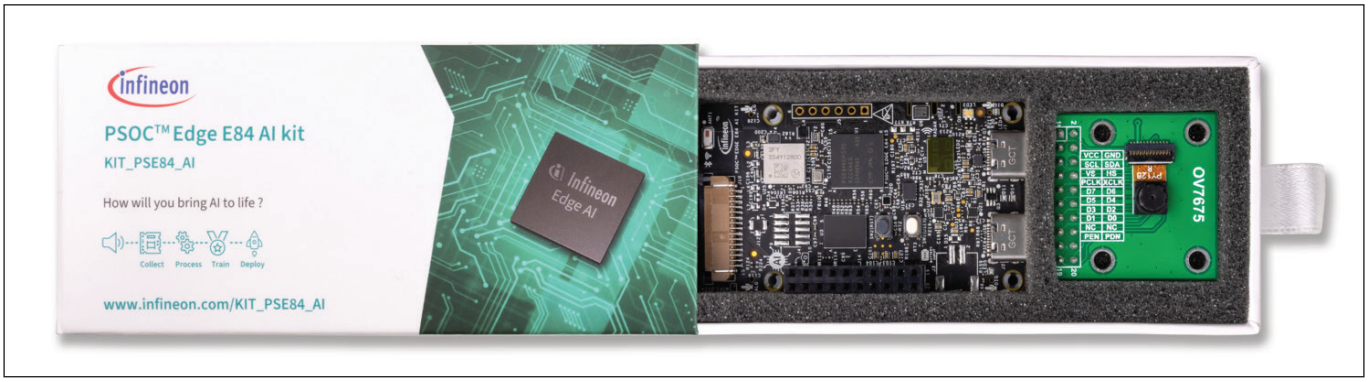

Figure 7: The PSOC™ Edge E84 AI Kit (Source: Infineon Technologies AG)

based on an Arm® Cortex®-M33 core, and includes a digital-signal processor and a floating-point unit, along with a wide range of peripherals and on-chip memory, making it ideally suited for motor drives.

To simplify development and reduce time to market, Infineon has developed an out-of-the-box reference design for ESCs in drone motor drives, with full open-source software support. The system, called REF_ ESC_48V_80A_FOC, is Infineon's first silicon-based drone motor drive reference design.

The power board includes three paralleled SSO8 N-channel power MOSFETs (4 mΩ) enabled by Infineon's OptiMOS™ 8 technology. Two options are available: a cost-optimized solution with 4-mΩ MOSFETs and a best-in-class solution with 1.8-mΩ MOSFETs. The power board also includes bulk capacitors and three tunnelling-magnetoresistance-based current sensors to measure phase currents as feedback for the current controller, thus enabling FOC.

The logic board contains the MCU, auxiliary power supply units, and gate driving circuitry. Its control algorithm enables sensorless FOC, with speed control based on the Infineon Motor Control Library V3.0.

Figure 6 shows a block diagram of the reference design. A buck converter converts the input DC voltage to 15 V for the gate driver ICs. The 15-V rail is also converted to 3.3 V by a linear dropout regulator to provide power to the MCU, current sensors, and temperature sensor.

A simple resistor divider network is used to sense the bus voltage for the motor controller. Gate resistors on the power board are used to control the dV/dt of the power MOSFETs. The current sensors are non-invasive, so no direct electrical connection to the switch node is required.

Operating from an input voltage range of 24 V to 60 V, the design provides up to 60 A of continuous output and up to 80 A peak. Output power is up to 2 kW.

FLIGHT CONTROL MADE EASY WITH PSOC™ EDGE E84 KIT

The ***PSOC™ Edge E84 AI Kit*** is engineered to power the next generation of intelligent edge devices, combining high performance, security, and energy efficiency in a single platform. Its advanced multicore architecture enables demanding flight control algorithms to run on the 400-MHz Arm® Cortex®-M55 core, while a secondary Arm® Cortex®-M33 core simultaneously manages sensor acquisition, peripherals, and I/O, ensuring zero interference and maximum system efficiency.

Built-in Arm® Ethos™-U55 NPU acceleration brings edge AI capabilities directly to the device, enabling real-time sensor fusion, state estimation, and vision-based autonomy without reliance on the cloud. Designed with PSA Level 4 security, the platform supports secure boot, encrypted firmware updates, and protected key storage to safeguard flight control systems against tampering. Manufactured on a 22-nm ultra-low-power process, the MCU also maximizes battery efficiency, helping extend operational endurance and optimize performance per charge.

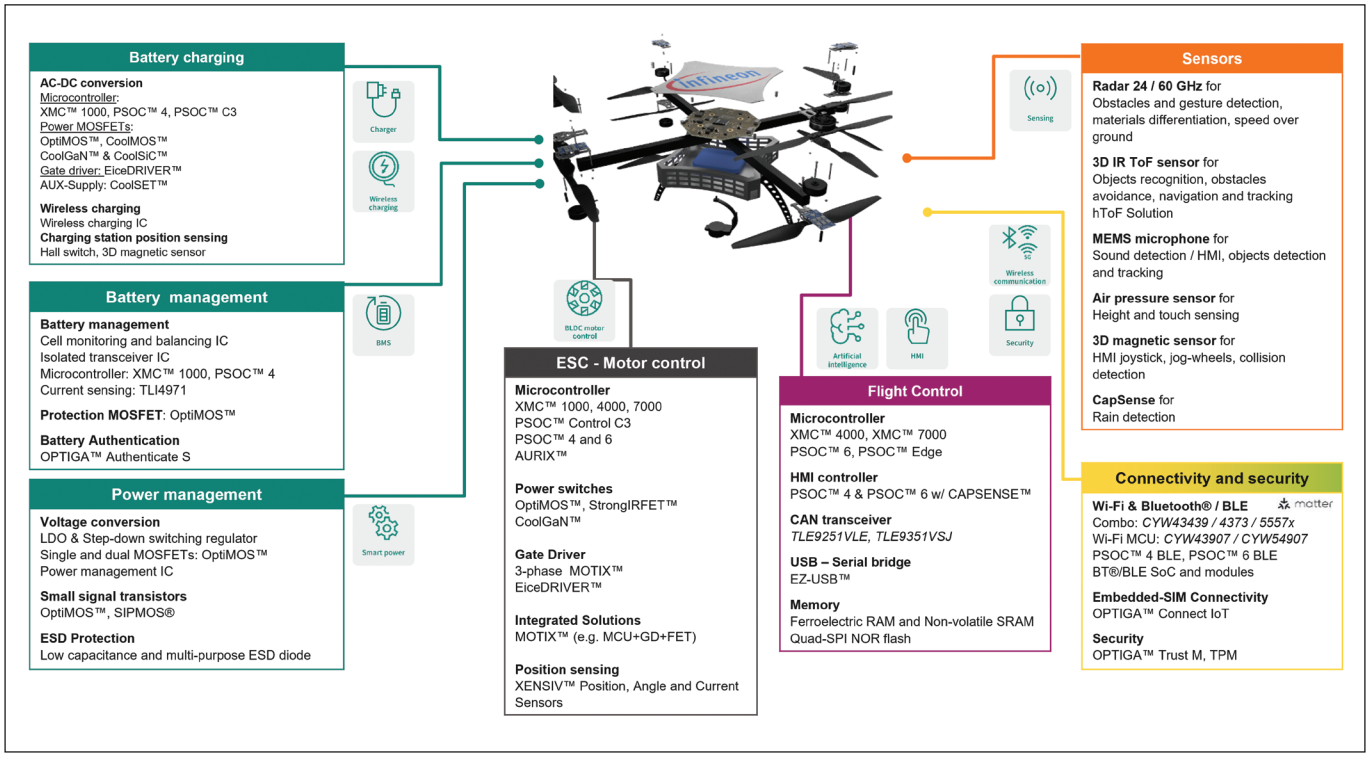

Figure 8: Infineon has you covered for every functional block. (Source: Infineon Technologies AG)

The kit is equipped with Infineon's radar, digital and analog microphones, a barometric pressure sensor, and an AIROC™ Wi-Fi and Bluetooth® combo chip.

INFINEON'S COMPLETE SOLUTIONS FOR DRONES

Infineon offers a "one-stop shop" for drones, with our broad semiconductor portfolio, backed up by our global support team. We provide complete, ready-to-use solutions for multicopters and drones, as well as the manned drones of the future.

Our portfolio for drones includes every essential semiconductor, such as power electronics, controllers, security, authentication, wireless connectivity, and sensors. This means we can address every functional block, including the flight controller, ESC, remote controller, gimbal, BMS, and battery power management (see Figure 8).

By working with Infineon, drone manufacturers can design high-power systems in a compact size, with efficient power management that enables longer-range flights. Our components enable accurate, straightforward flight control and robust security and authentication—all with the high quality and reliability you would expect.

For any size of drone, we can help you get started quickly and bring your new drone to market in record time. For example, with little or no experience in motor, flight,

We can address every functional block, including the flight controller, ESC, remote controller, gimbal, BMS, and battery power management.

or human-machine interface control, you can rapidly implement solutions based on our PSOC™ Control and PSOC™ MCUs. In addition, project development timescales can be cut by 30% by using our reference designs and the ModusToolbox™ platform for MCU programming.

ESC REFERENCE DESIGN ACHIEVES EFFICIENT, RELIABLE SOLUTIONS

In this article, we've looked at the key electronic systems in a drone and focused on the role of the ESC in motor control. We've discussed the role of the various components in the ESC and how a reference design can deliver a reliable, efficient system.

Using Infineon's robust, high-quality semiconductors and sensors, you can design drones that are lighter and easier to fly, with greater range and longer battery life. And our reference design will help you to reduce development effort and cut time to market.