Optimal Efficiency Enabled by New Generation Super-Junction MOSFETs in Refrigerator Compressor Drives

Globally, about 220 million refrigerators and freezers are sold per year as of today, valuing at a market of around 75 billion US dollars in 2024.[1] This market is predicted to see a continuous CAGR growth of 6.27%, reaching around 120 billion US dollars by 2032. Two predominant Silicon based technologies are currently being used in the compressor drives of the fridge itself, the first one being the IGBT, and the second one being the High Voltage (HV) MOSFET. Out of the two, HV MOSFET's adoption is accelerating and there are two major trends contributing to it. The first trend is inverterization in the fridge's compressor systems, which enhances the efficiency, performance, and longevity of refrigerator compressors by utilizing inverter technology.

By Pengwei Sun, Principal Engineer, Product Definition and Application, and Huei-Tsuen Hsu, Senior Specialist, Product Management, both Infineon Technologies

Introduction

Traditional compressors operate at a fixed speed, constantly turning on and off to maintain the desired temperature. This on-off cycling can lead to energy wastage. In contrast, an inverter compressor adjusts its speed based on the cooling demand, running more consistently and at lower speeds when less cooling is needed, giving several advantages including energy savings, temperature stability, noise reduction and extended compressor life. This trend drives demand for performance optimized discrete devices, such as an HV MOSFET, as opposed to an IGBT. The second trend is more demanding regulations on system design and component selection. By 2026, China will implement a new energy efficiency standard - 20231710-Q-469 [2], which will push almost all refrigerators to optimize their design to fit this standard and increase inverterised weight for more efficiency. All-in-all, suppliers must look for more innovative ways to increase efficiency of the inverter stage, especially at light load operations. The new CoolMOS™ 8 at Infineon targets this modern challenge, balancing the cost competitiveness with high performance to fit the requirement for low energy consumption.

Refrigerator operations

During the lifetime of refrigerators, there are mainly three operational modes. The first one is pull down operation at 100% power. The fridge starts from ambient temperature, and the compressor runs at the maximum power to cool it down. It happens only a few times over the lifetime of the fridge, for example when the new fridge first gets plugged in or when it's moved to a new location. The second one is nominal load operation at around 50% power. The compressor runs at higher power to keep it cool when the fridge door is open and people store food inside or get food from the fridge. It really depends on the usage frequency of each individual household, for example the door is open about 10 times per day for 10s. The third one is light load operation at around 20% power. The compressor runs at low power to main the temperature when the door is closed. It counts for majority of the lifetime, around 95%. Therefore, the efficiency at light load is the most critical in terms of energy savings in fridge operations. In order to boost up energy efficiency and obtain higher energy star ratings, fridge manufacturers put more emphasis on improving the light load efficiency.

CoolMOS™ 8

Infineon's newest CoolMOS™ 8 (CM8) [3] at 600 V is leading the way in high voltage super-junction MOSFET technology, setting the standard for both technology and price performance. The series is equipped with an integrated fast body diode offering lower reverse recovery charge, making it suitable for hard-switching motor drives applications. The thermal resistance improvement with up to 50% made possible by .xT package interconnect technology, leads to better thermal performance compared to the previous generation of PFD7 series. It fulfills Class 2 level of ESD HBM classification, which is a must-have design requirement in home appliances.

Evaluation platform

In order to better evaluate the performances of different technologies in refrigerator compressor drives application, we use the following reference board from Infineon [4] in Figure 1. It's a dedicated single-layer PCB without any heatsink, targeted for 3-phase rotary fridge compressors. It operates with IMD111T[5], which is a smart driver with the microcontroller and the 3-phase gate driver inside. The devices under test are six discrete power switches, either IGBT or HV MOSFET.

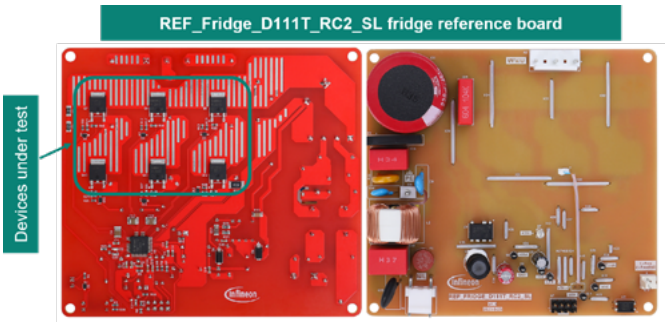

Figure 1: Fridge reference board

Figure 2 shows the test platform set-up. DC power supply at 300V is used for the input. Power meters are used to measure the input DC power, the output AC power and the auxiliary power respectively. A thermocouple is attached to case of the low side middle phase transistor device to monitor the case temperature. The efficiency of the devices under test can be expressed as η = AC power/ (DC power-Aux power) x100%.

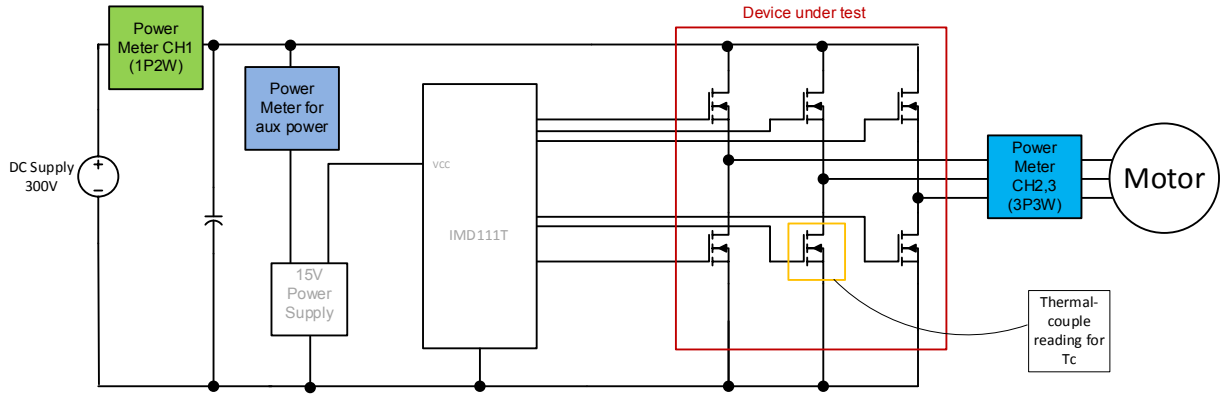

Figure 2: Test platform set-up

Efficiency measurement

Several device technologies are included in the evaluation, including 600 V/600 mΩ CM8 MOSFET, 600 V/600 mΩ PFD7 MOSFET, 600 V/6 A RCD2 IGBT from Infineon, and a competitor 600 V/600 mΩ MOSFET. All the devices share the same package, DPAK, which has been widely adopted in this application. The typical switching frequency of refrigerator drives is from 4 kHz to 6 kHz. Therefore, the 5 kHz 3-phase SVPWM scheme is used in the evaluation. The board is placed in an enclosure with maintaining an ambient temperature of 25°C. The power is tested from light load 30W up to full load 300W. The efficiency curves are plotted in Figure 3.

As can be seen from the measurement, MOSFET's efficiency is higher than IGBT across the entire load range, thereby offering better energy savings over all the refrigerator operation modes. Efficiency peaks at 100W, and CM8 has the highest peak efficiency at 98.5% among all the compared technologies. At light load 60W (20% load), CM8 efficiency is 98.4%, while RCD2 IGBT only has 97.2%, and CM8 is leading IGBT by 1.2%. At 10% load, the benefit of CM8 is even more obvious with 1.6% ahead of IGBT. At full load, CM8 offers 97.2%, which still leads IGBT by 1.2%.

Compared to the previous generation PFD7, CM8 sees efficiency improvement of 0.2% at 20% light load, and 0.6% at 100% full load. CM8 is leading the competition HV MOSFET across the entire load by 0.6% to 1%.

Figure 4 shows the case temperature measurement at different load conditions. As can be seen, it's a good reflection of efficiency measurement where CM8 has the coolest readout across the entire load range. This also then implies more reliable operation of CM8 over the lifetime of the fridge compared to all other technologies. Additional switching frequencies are tested at 3kHz and 10kHz to show the capability of CM8, and the efficiency curves are plotted in Figure 5. Basically, the frequency change has a more impact on the light load efficiencies where switching losses are more prominent. If the frequency change can be implemented in the light load, more efficiency improvement will be achieved.

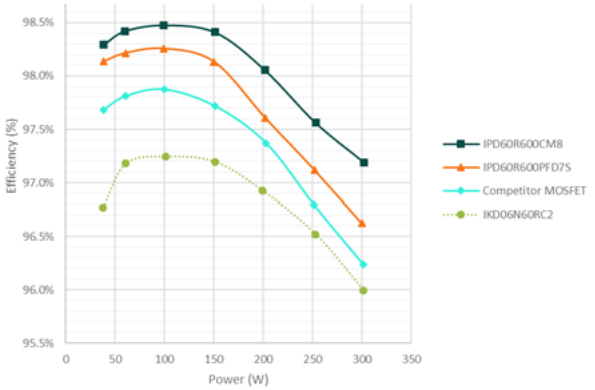

Figure 3: Efficiency measurement

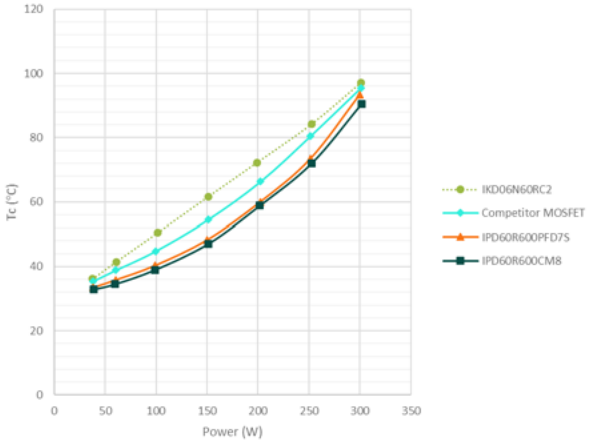

Figure 4: Case temperature measurement

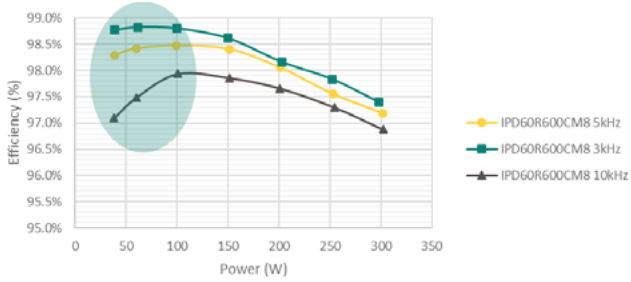

Figure 5: Efficiency measurement at different switching frequencies

Conclusion

In this article, several power device technologies have been studied and compared for efficiency in the refrigerator compressor drives application. Through these measurements, CM8 is proved to be the best option with the lowest losses across the entire load that translate into 1.2% to 1.6% efficiency improvement compared to IGBT solutions. With the adoption of CM8, the energy consumption of the fridge will be greatly reduced and requirement of higher energy star ratings shall be met.

References

[1] https://www.fortunebusinessinsights.com/refrigerator-market-102686

[2]https://std.samr.gov.cn/gb/search/gbDetailed?id=0DF32BA1AAD64DDEE06397BE0A0A756D

[3] https://www.infineon.com/cms/en/product/power/mosfet/n-channel/500v-950v/600-v-coolmos-8

[4] https://www.infineon.com/cms/en/product/evaluation-boards/ref_fridge_d111t_rc2_sl

[5]https://www.infineon.com/cms/en/product/power/motor-control-ics/imotion-integrated/imd111t-6f040/