Solution brief

CoolMOS™ CCM totem pole PFC

Silicon solution to reach highest PFC efficiency

Industrial SMPS applications such as sever & telecom are driven by the trends of increased power density, highest efficiency, ever-growing output power, system cost-down as well as modularity and design simplicity. To reach an overall efficiency of 98 percent and to contribute to a greener and safer world, super high-efficiency levels in the power factor correction stage are crucial, which is why standard PFC topologies do face a limit. By using a CCM totem-pole PFC topology, a peak efficiency of close to 99 percent can be reached in the PFC stage. The market-leading CoolMOS™ CFD7 SJ MOSFET combined with Infineon's CoolSiC™ Schottky diodes, EiceDrRIVER™, and OptiMOS™ products as well as the CoolMOS™ S7 in the low-frequency leg offers an innovative and cost-effective way which enables to deploy CCM totem pole PFC with silicon switches, complementing our powerful WBG offering.

How does the innovative Si-based solution work?

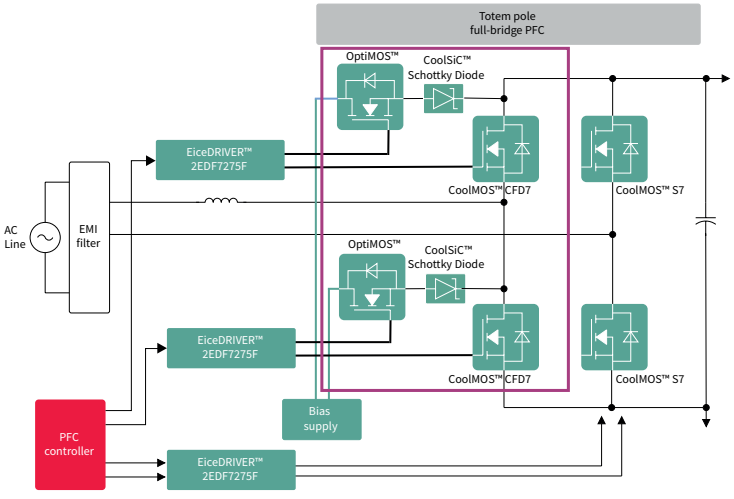

When operating a totem-pole PFC in continuous conduction mode (CCM), SJ MOSFETs usually cannot be used due to the high output capacitance charge (Qoss) that is required to charge and discharge the Coss of the devices together with the significant-high reverse recovery losses of the intrinsic body diode of the Si SJ MOSFETs. By "pre-charging" the SJ MOSFET, the losses associated with its Qoss and the reverse recovery charge (Q_{rr}) are drastically reduced since those charges are provided from a low-voltage source. As a result, the commutation losses in the silicon SJ MOSFETs are greatly reduced and continuous hard-commutation in the normal CCM operation of the totem-pole PFC is feasible.

www.infineon.com/eval-3k3w-tp-pfc-cc

Key features

- Market-leading CoolMOS™ CFD7 technology with best-in-class reverse recovery charge (Q_{rr})
- Enabling ~99 percent efficiency in the PFC stage with CoolMOS™
- A simple approach combining Infineon's market leading technologies enabling to source all components out of one hand
- Enabling highest-efficiency at competitive system cost down
- Broad Si portfolio with bottom- and top-side cooled packages to build on
- Infineon Si MOSFET solution with 20 years of track record in quality and supply security
- Technical support material
- Application note
- Demo board for 3.3 kW application
- Design-support tool





CoolMOS™ CCM totem pole PFC

Silicon solution to reach highest PFC efficiency

Reaching highest efficiency in CCM totem pole PFC with Si-based high voltage switches

As CCM totem-pole PFC topology is a hard-switching topology, reliability and robustness are very important. The CoolMOS™ CFD7 family offers a super low reverse recovery charge (Q_{rr}) level, making it the right-fit technology for this solution with the implementation of a pre-charging stage.

In addition, the CoolMOS™ CFD7 offers a broad SMD portfolio to build on, including bottom and top-side cooled packages. Thanks to it's best-in-class figure of merits ($R_{DS(on)}$ x Q_{oss} and $R_{DS(on)}$ x Q_{rr}) it allows the most efficient implementation of the described solution compared to other Si-based market offerings. Overall, as shown in the graph on the right, between 14 and 40 percent power loss reduction and close to 99 percent peak efficiency in the PFC stage can be reached, supporting the market trends in industrial SMPS applications at a competitive price/performance ratio.

Also, we do offer a 3.3 kW demo board for this solution, optimized for server applications incl. technical documentation of how to implement the solution.

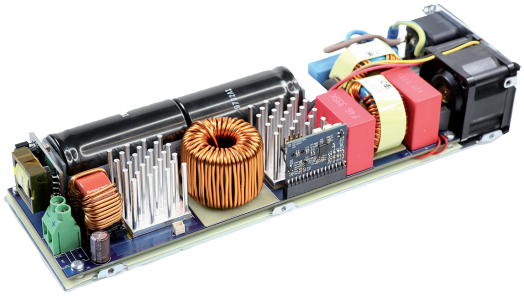

EVAL_3K3W_TP_PFC_CC
Ordering code: EVAL3K3WTPPFCCCTOBO1

Power loss comparison among different PFC topologies
V_{in} = 230 V_{AC}, P_o = 3.3 kW, V_{out} = 400 V, T_a = 30 °C, f_{sw} = 65 kHz

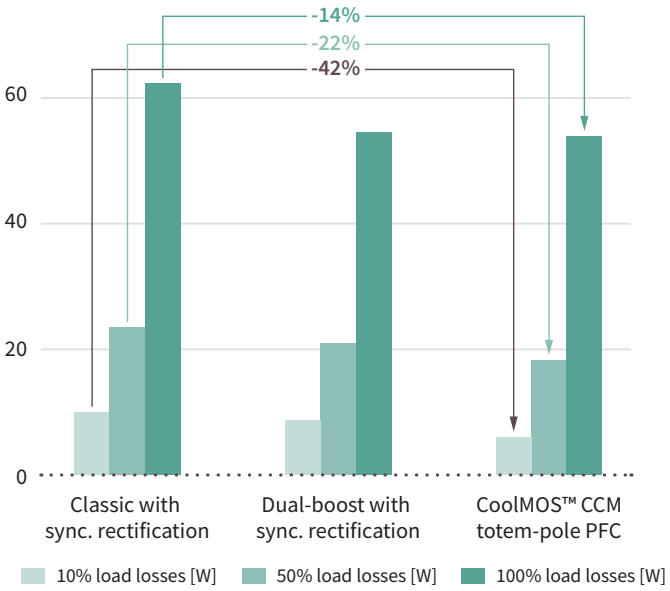

List of components	
Part name	**OPN**
4x IPT60R090CFD7	IPT60R090CFD7XTMA1
2x IDDD08G65C6	IDDD08G65C6XTMA1
2x BSZ440N10NS3	BSZ440N10NS3GATMA1
2x 2EDF7275F	2EDF7275FXUMA2
1x 1EDN8511B	1EDN8511BXUSA1
2x IPT60R022S7	IPT60R022S7XTMA1

Published by
Infineon Technologies Austria AG
9500 Villach, Austria

© 2021 Infineon Technologies AG.
All Rights Reserved.

Document number: B152-I1165-V1-7600-AP-EC-P
Date: 04 / 2021

Please note!
This Document is for information purposes only and any information given herein shall in no event be regarded as a warranty, guarantee or description of any functionality, conditions and/or quality of our products or any suitability for a particular purpose. With regard to the technical specifications of our products, we kindly ask you to refer to the relevant product data sheets provided by us. Our customers and their technical departments are required to evaluate the suitability of our products for the intended application.

We reserve the right to change this document and/or the information given herein at any time.

Additional information
For further information on technologies, our products, the application of our products, delivery terms and conditions and/or prices, please contact your nearest Infineon Technologies office (www.infineon.com).

Warnings
Due to technical requirements, our products may contain dangerous substances. For information on the types in question, please contact your nearest Infineon Technologies office.

Except as otherwise explicitly approved by us in a written document signed by authorized representatives of Infineon Technologies, our products may not be used in any life-endangering applications, including but not limited to medical, nuclear, military, life-critical or any other applications where a failure of the product or any consequences of the use thereof can result in personal injury.