Version 1.0 , June 2001

Application Note

AN-PSM-11

Switched and Averaged PSPICE Models

Authors: Horst Edel
Daniel Lindenmeyer

Published by Infineon Technologies AG

www.infineon.com/simulate
www.infineon.com/coolset

Support: simulate@infineon.com

Power Management & Supply

Never stop thinking

Serial number: 9101-20-P1-1-----

This work is protected by copyright. All rights reserved. Neither the complete work nor extracts therefrom may be copied or reproduced, regardless of the means employed, without the permission of the publisher.

Text, illustrations and examples were produced with great care. Nevertheless, errors cannot be completely excluded. The author can assume neither a legal responsibility nor any form of liability for any possibly remaining incorrect details and their consequences.

PSPICE is a registered trademark of MicroSim Corp. USA.

© 2000 by Ing. Büro Horst Edel

Contents

1 Preliminary remarks 4
1.1 Description of the converter symbols 4
1.2 General notes 5

2 Flyback converter with electrical isolation, 1 output 8
2.1 Linearized circuit 8
2.2 Averaged model 8
2.3 Time-domain characteristic with current loop 9
2.4 DC operating points 10
2.5 Frequency-domain characteristic 11

3 Flyback converter with electrical isolation, 2 outputs 12
3.1 Linearized circuit 12
3.2 Averaged model 12
3.3 Time-domain characteristic with current loop 13
3.4 DC operating points 14
3.5 Frequency-domain characteristic 15

A Convergence aids 16

B Notes on the subcircuits 16
B.1 Activation 16
B.2 Adapting the averaged models 17

1 Preliminary remarks

The simulations described in this document were carried out with *PSpice V8.0 Version V2.0*.

1.1 Description of the converter symbols

All the symbols used in the converter circuits have the same structure.

Inputs

ue: Connection for the input voltage.
d1: Input of the averaged pulse control factor d_1 for controlling the converter. CAUTION: This input is not restricted to values between 0 and 1. Meaningless pulse control factors (e.g. $d_1 = -0.5$) can therefore be specified. (Limiting occurs in the pulse-width modulator).

Outputs

ua: Connection(s) for the output voltage(s).
Ud: Drain connection of the external switching transistor.
d3: Output for display of the operating mode and length of the interval d_3T_s (inductor current $i_L = 0$). $d_3 = 0$ means the converter is operating continuously. For example, $d_3 = 0.3$ means the converter is operating discontinuously and the time duration of the interval is $d_3T_s = 0.3 * T_s$ (T_s is the switching period).
dis: Output which describes the slope of the switch current in the interval d_1T_s. This quantity is necessary for current loop operation. In the case of a "single-inductor-converter", dis is equal to the slope of the inductor current i_L in the interval d_1T_s. In the case of a converter with several inductors, however, it is a weighted linear combination of the inductor currents.
iL: Output for the averaged inductor current. In the case of a converter with one inductor it is the mean value of the current through this inductor. This quantity is important for current loop operation.
eta: Output which indicates the efficiency of the circuit. CAUTION: The output supplies meaningful values only in the steady-state condition and with DC analysis. Moreover, it serves only as a point of reference, as, of course, the switching losses of the real converter are not taken into account.

With all models, variable parameters are represented in the symbol and can be edited by double-clicking. The variable values can be either figures (e.g. L = 50uH) or parameter values (e.g. L ={L1}). For latter, the parameter values must be defined in the circuit by a PARAM block.

Every averaged model has a **null** parameter. This parameter serves as a convergence aid. PSPICE experiences difficulties if an expression in an EVALUE source in IF commands is to become zero. Example:

```
E3      IF (V(dss)-Dmin>0,  V(dss),Dmin)
```

It makes sense here to replace the 0 by a very small value ($1u = 10^{-6}$; $1m = 10^{-3}$).

$$-1m \leq null \leq 1m$$

It is by no means certain that a value with a large magnitude is always favorable. It is possible that a circuit with null=100u does not converge, but does with null=10u.

Unfortunately a little experimentation is unavoidable.

The control inputs and outputs are each referred to the ground of input U_e. In the case of the circuits with electrical isolation, the outputs can be connected in any way, i.e. also connected in series. They must have only one, albeit very high-resistance path to the primary ground.

1.2 General notes

Both converters are intended for operation with pulse-width modulators with integrated switching transistors. The test circuits are identical for both. The TDA1683x is used for driving the flyback converter with one output (1004i_LIN) and the TDA16822 for the converter with two outputs (1005i_LIN). Both are Infineon products. The averaged circuit will be presented first, then the averaged model derived from it. A simulation in the time domain follows in order to demonstrate the accuracy of the model. It compares the transient responses when a pulse-width modulator with current loop is used. The curves show the comparison of the inductor current i_L and the output voltage u_a of the switched and the averaged circuits.

Quantity	Switched model	Averaged model
i_L	I(L1)	V(iL)
u_a	V(uazt)	V(ua)

The table shows the assignment of the quantities used to the models.

The curve V(d3) of the averaged model shows the temporal response of the length of d_3. This quantity can assume a value between zero and one. V(d3) = 0 means that the interval d_3T_S = 0, i.e. the converter operates continuously. V(d3) = 1 means that the inductor current is always zero. This can be the case, for instance, if the controller in a converter with feedback disconnects as a consequence of an excessive output voltage (actual value).
The transformer ratios V1 and V2 in the case of the converter with two outputs represent the ratio of the number of primary turns w1 to the respective secondary winding w2 and w3:

V1 = w1 / w2 V2 = w1 / w3

The diode forward voltage drops can be arbitrarily chosen in the case of the averaged models (including zero, for instance). In order that the results from the switched model agree with those of the averaged model during the comparison simulation in the time domain, the diode forward voltage drops must in each case be assumed as u_d = 0.8V, since the forward voltage of the SPICE diode is preset at approximately 0.8V. The differences compared to the switched model depend very strongly on the chosen time increment and the ripple of the inductor current. The larger the two are chosen, the greater the differences become.

The subsequent simulations can be performed only with the averaged model, since only with that is SPICE able to calculate operating points which differ from zero. The first simulation shows an analysis of the DC operating points. It can be seen how the efficiency *h* = *V(eta)* and the length of the interval d_3 = V(*d*3) change when the control voltage is increased from 0 to 4V.

The second diagram shows the comparison of the output voltage u_a = V(*ua*) with the theoretical value V(uas). This value is calculated in the simulation by an EVALUE source. Since no internal resistances are taken into account in this calculation, the deviations naturally become greater as the load current increases.
The last simulation shows the characteristic in the frequency domain. In each case the response characteristic of pulse control factor d_1 to the output voltage u_a, i.e. u_a/d_1, is shown in Bode diagrams. The upper diagram shows the amplitude response

$$A = 20\log\sqrt{\mathrm{Re}^2 + \mathrm{Im}^2}$$

and the lower the phase response

$$j = \arctan\frac{\mathrm{Im}}{\mathrm{Re}}$$

with

$$\frac{u_a}{u_d} = F(jw) = \mathrm{Re}(jw) + j\,\mathrm{Im}(jw)$$

In the process the load resistor R_a is varied logarithmically with three values per decade. It can be readily seen that at a certain resistance value the converter changes from continuous to discontinuous operating mode.
SPICE calculates the operating point before every frequency response analysis. Six operating point calculations (DC analyses) are therefore performed for each run. The results of these calculations are available in the SPICE output file.

Example of a SPICE output file:

```
Operating points from the frequency response analysis of converter 1004i fq

**** SMALL SIGNAL BIAS SOLUTION    PARAM RA = 10
********************************************************************************
NODE   VOLTAGE   NODE   VOLTAGE    NODE   VOLTAGE   NODE   VOLTAGE
( d1)    .0662  ( d3) 126.1E-18   ( FB)   2.0000   ( iL)      .6688
( Tj)  23.0000  ( ua)    6.2452   ( Ud)   99.9550  ( ue)   100.0000
(dis) 1.000E+06 ( eta)    .8804   ( Vcc)  20.0000  (X U1.3)  -.0450


**** SMALL SIGNAL BIAS SOLUTION    PARAM RA = 21.544
********************************************************************************
NODE   VOLTAGE   NODE   VOLTAGE    NODE   VOLTAGE   NODE   VOLTAGE
( d1)    .0976  ( d3)   0.0000    ( FB)   2.0000    ( iL)   .5121
( Tj)  23.0000  ( ua)   9.9567    ( Ud)  99.9500    ( ue) 100.0000
(dis)1.000E+06  ( eta)   .9208   ( Vcc)  20.0000  (X U1.3)  -.0505


**** SMALL SIGNAL BIAS SOLUTION    PARAM RA = 100
********************************************************************************
NODE   VOLTAGE   NODE   VOLTAGE    NODE   VOLTAGE   NODE   VOLTAGE
( d1)    .1003  ( d3)    .4605    ( FB)   2.0000   ( iL)    .4987
( Tj)  23.0000  ( ua)  21.9080    ( Ud)  99.9500   ( ue) 100.0000
(dis)1.000E+06  ( eta)   .9599   ( Vcc)  20.0000  (X U1.3) -.0505


**** SMALL SIGNAL BIAS SOLUTION    PARAM RA = 215.44
********************************************************************************
NODE   VOLTAGE   NODE   VOLTAGE    NODE   VOLTAGE   NODE   VOLTAGE
( d1)   .1003   ( d3)    .5988    ( FB)   2.0000   ( iL)    .4987
( Tj) 23.0000   ( ua)  32.3400    ( Ud)  99.9500   ( ue) 100.0000
(dis)1.000E+06 ( eta)    .9709   ( Vcc)  20.0000  (X U1.3) -.0505


**** SMALL SIGNAL BIAS SOLUTION    PARAM RA = 464.16
********************************************************************************
NODE   VOLTAGE   NODE   VOLTAGE    NODE   VOLTAGE   NODE   VOLTAGE
( d1)   .1003   ( d3)    .6939    ( FB)   2.0000   ( iL)    .4987
( Tj) 23.0000   ( ua)  47.6540    ( Ud)  99.9500   ( ue) 100.0000
(dis)1.000E+06 ( eta)    .9785   ( Vcc)  20.0000  (X U1.3) -.0505


**** SMALL SIGNAL BIAS SOLUTION    PARAM RA = 1.0000E+03
********************************************************************************
NODE   VOLTAGE   NODE   VOLTAGE    NODE   VOLTAGE   NODE   VOLTAGE
( d1)   .1003   ( d3)    .7591    ( FB)   2.0000   ( iL)    .4987
( Tj) 23.0000   ( ua)  70.1330    ( Ud)  99.9500   ( ue) 100.0000
(dis)1.000E+06 ( eta)    .9837   ( Vcc)  20.0000  (X U1.3) -.0505
```

2 Flyback converter with electrical isolation, 1 output

2.1 Averaged circuit

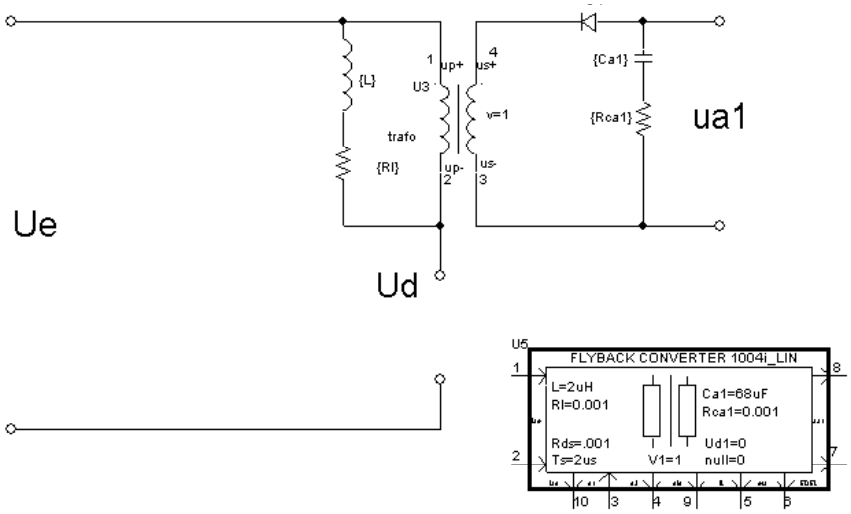

Ts: Cycle time

Ud1: Forward voltage of D1

Rds: Forward resistance of S1
Although no switch is integrated, the parameter Rds is required in order to determine the damping in the converter.

(File: 1004i_sch.sch)

2.2 Averaged model

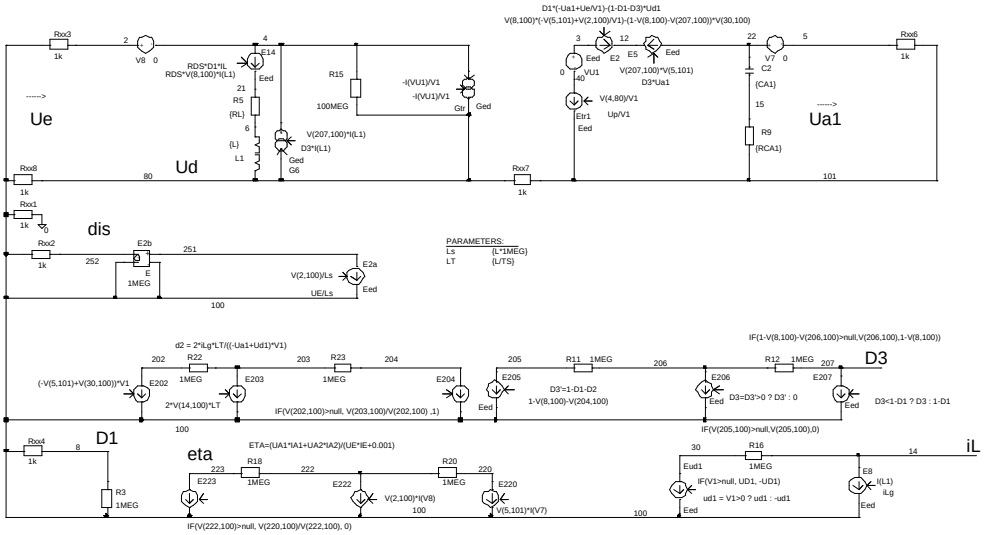

(File: 1004i_md.sch)

2.3 Time-domain characteristic with current loop

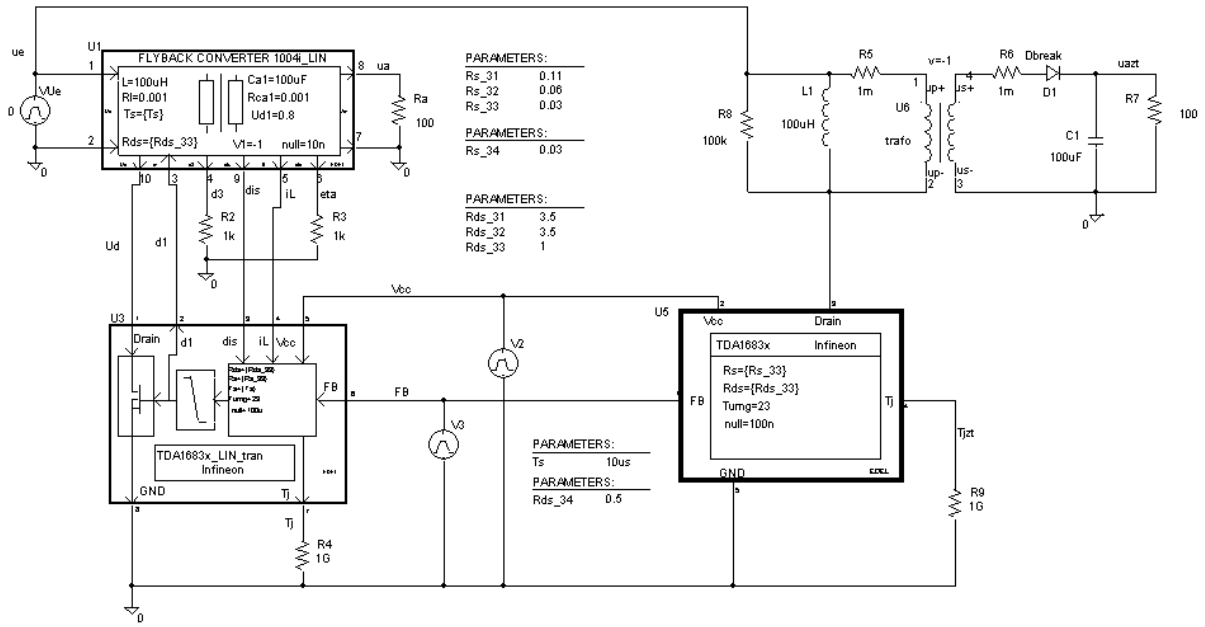

(File: 1004i_zp.sch)

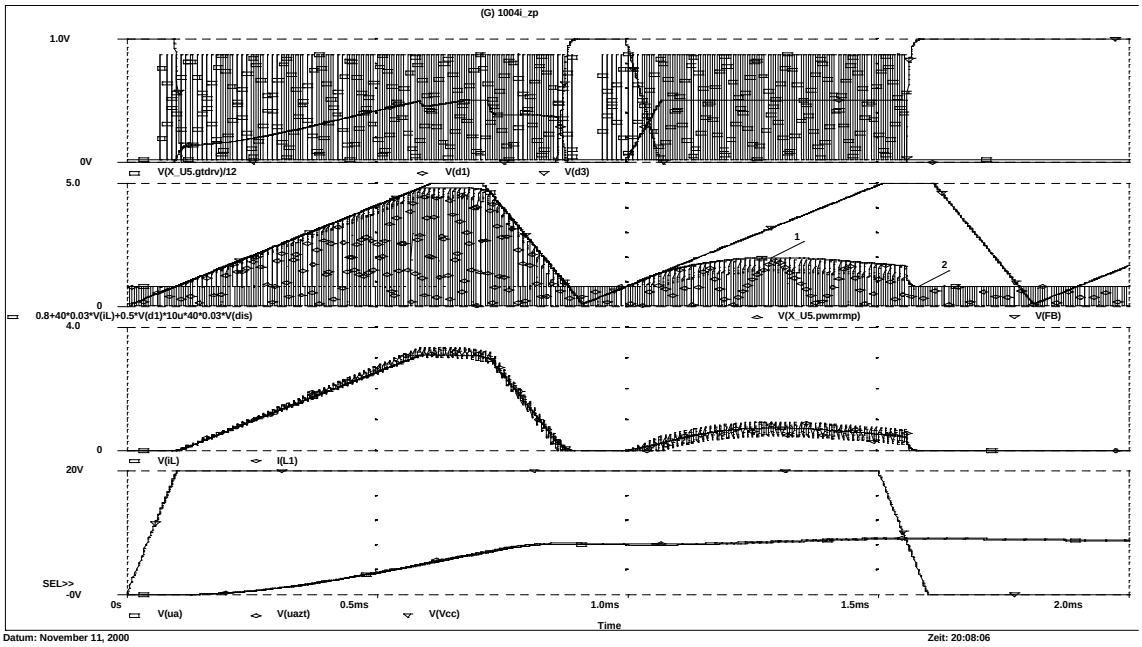

Switch-on characteristic with sawtooth controller voltage V(FB).The second curve shows the comparison of the inductor peak current i_{LS} in the switched model with the calculation in the averaged model:

i_{LS} ~ mean value of i_L + half current rise dis * Ts.

$$i_{LS} = 0.8 + 40R_s i_L + 1/2 d_1 T_s 40 R_s dis$$

At marking 1 the current is limited by the maximum pulse control factor D_{max} = 0.5. At marking 2 the PWM is switched off by the drop in the supply voltage Vcc.

2.4 DC operating points

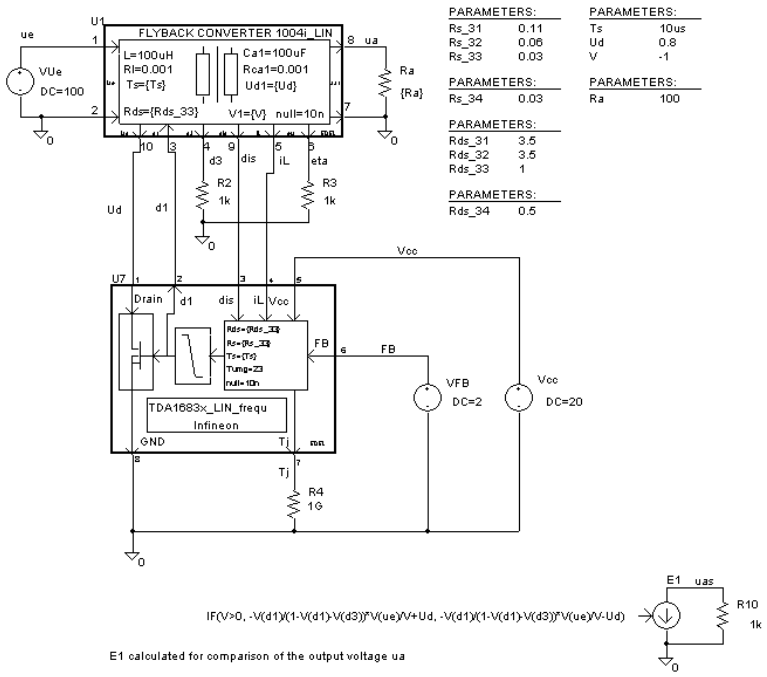

E1 calculated for comparison of the output voltage ua

(File:1004i_gl.sch)

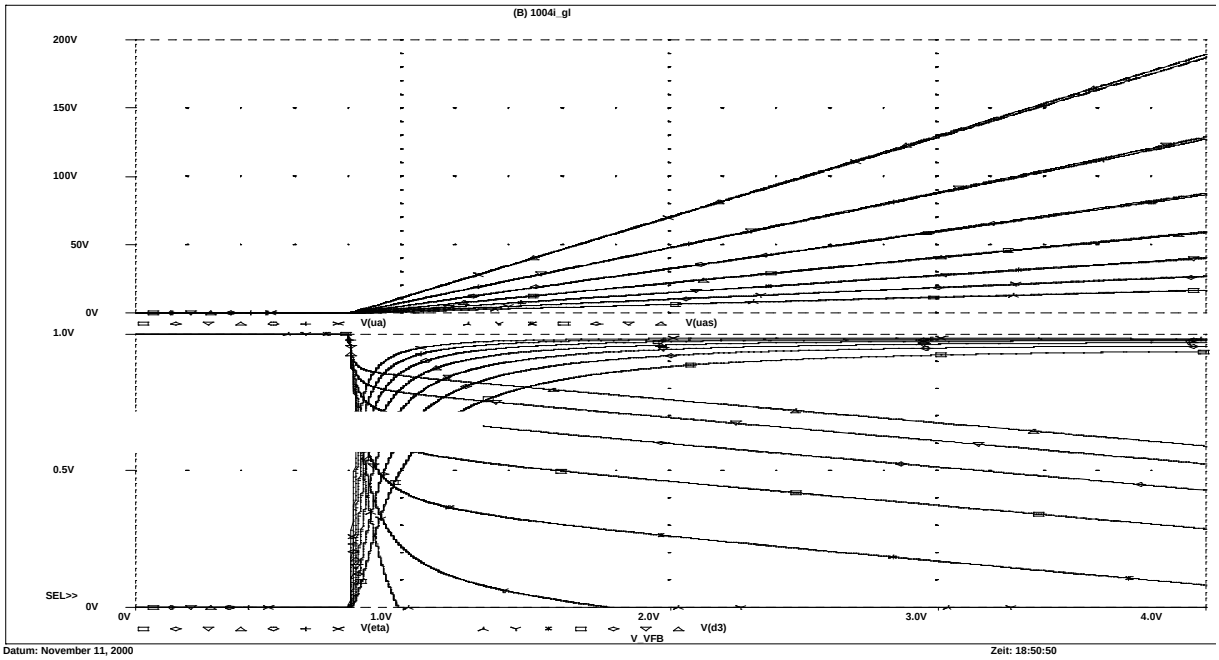

Logarithmic variation of R_a from 10Ω ... 1kΩ with 3 values per decade, with U_e = 100V and U_{d1} = 0.8V. The TDA 1683x is switched on only after $V(FB) \geq 0.8V$.

2.5 Frequency-domain characteristic

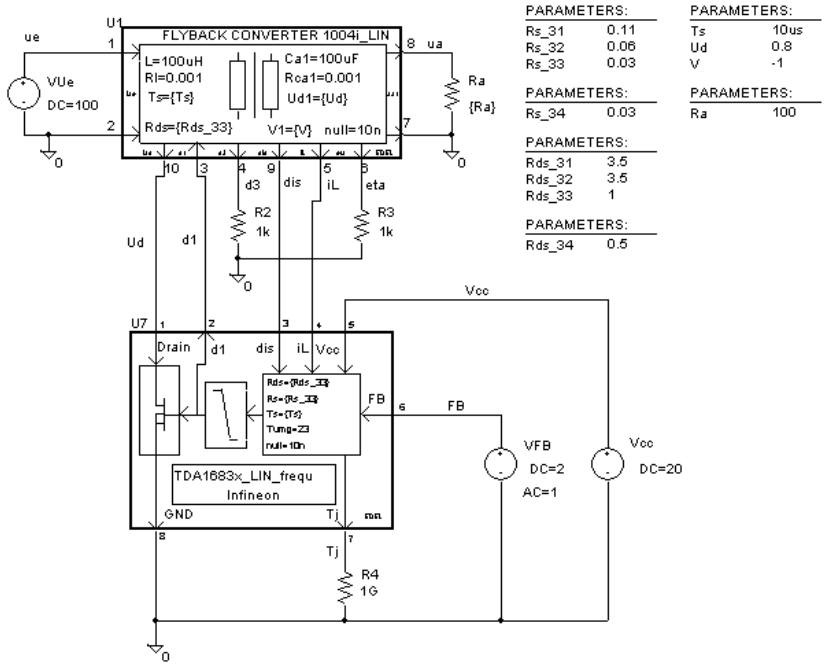

(File:1004i_fq.sch)

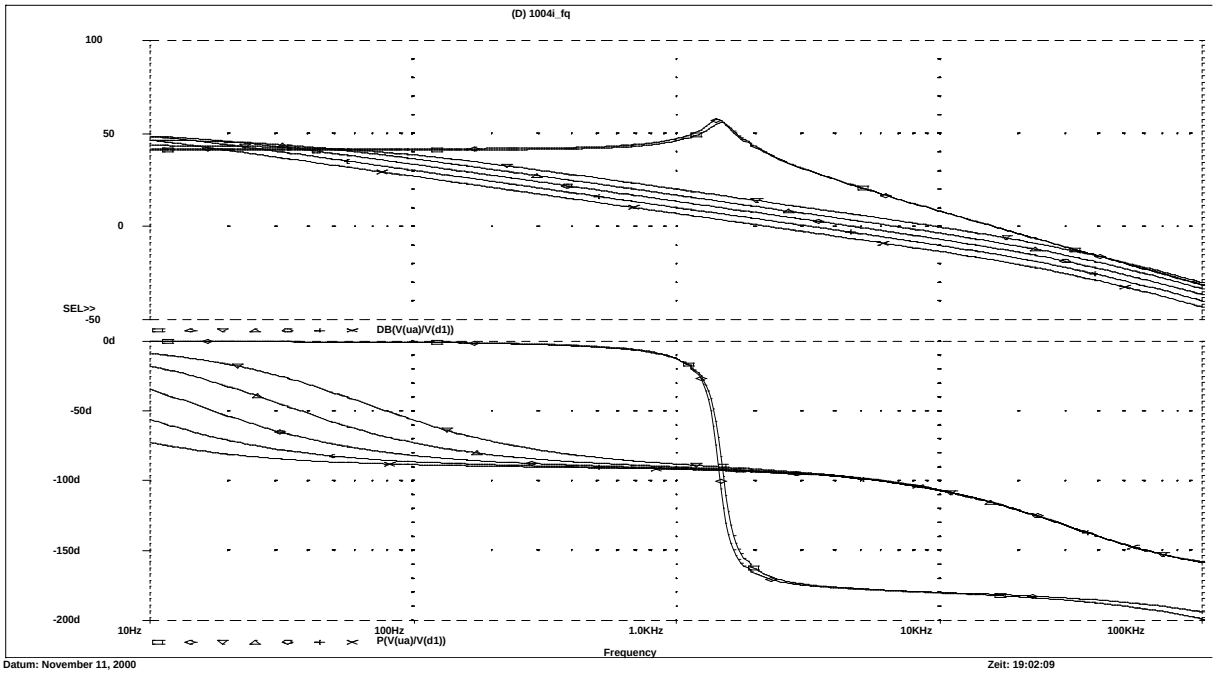

Response characteristic of u_a/d_1. Variation of Ra from 10Ω ... 1kΩ with 3 values per decade.

3 Flyback converter with electrical isolation, 2 outputs

3.1 Averaged circuit

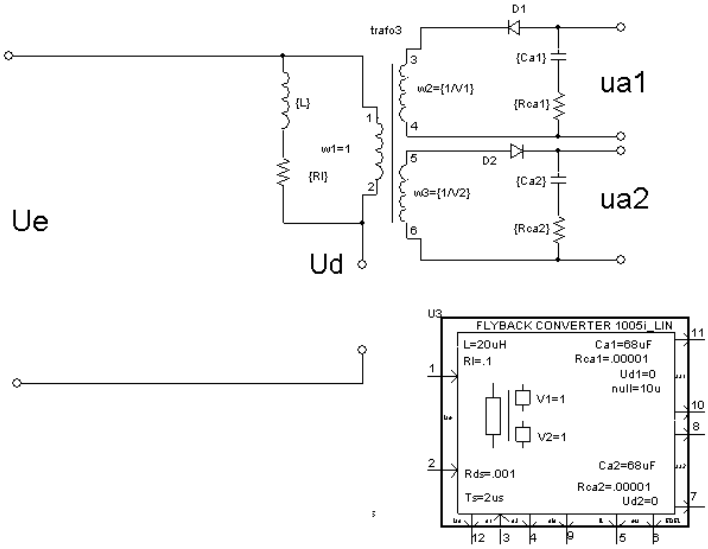

Ts: Elementary period

Ud1: Forward voltage of D1
Ud2: Forward voltage of D2

Rds: Forward resistance of S1
Although no switch is integrated, the parameter Rds is required in order to determine the attenuation in the converter.

(File: 1005i_sch.sch)

3.2 Averaged model

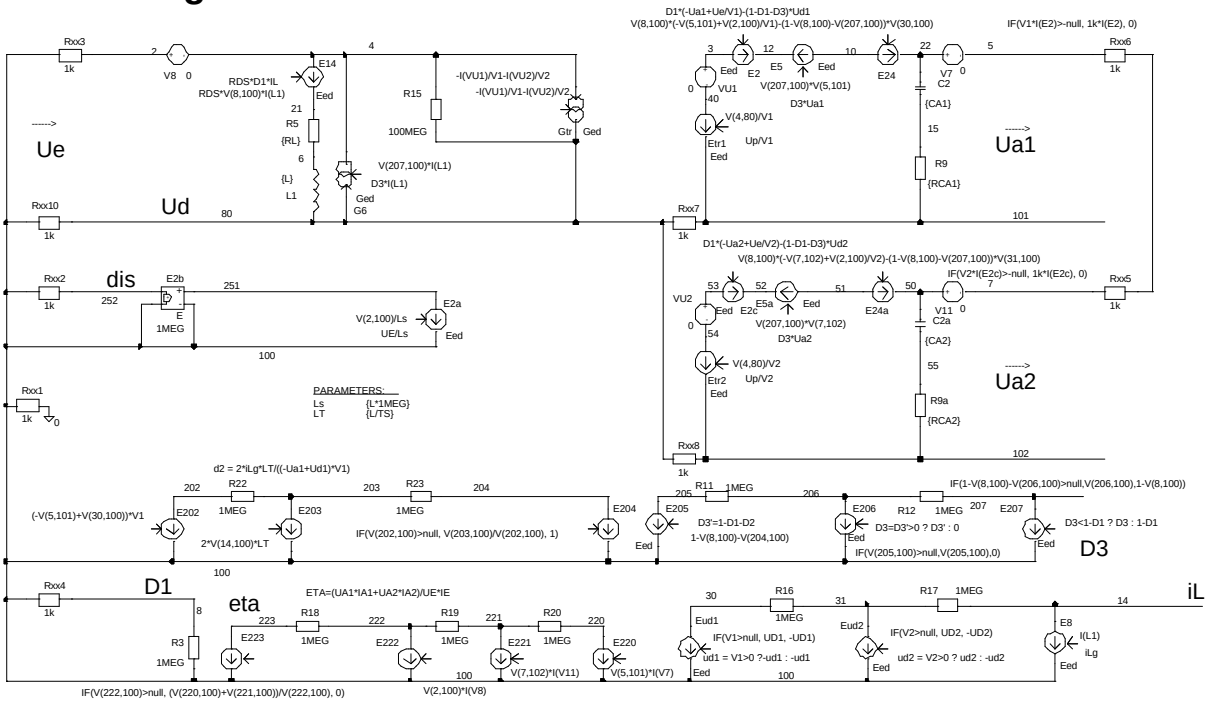

(File: 1005i_md.sch)

3.3 Time-domain characteristic with current loop

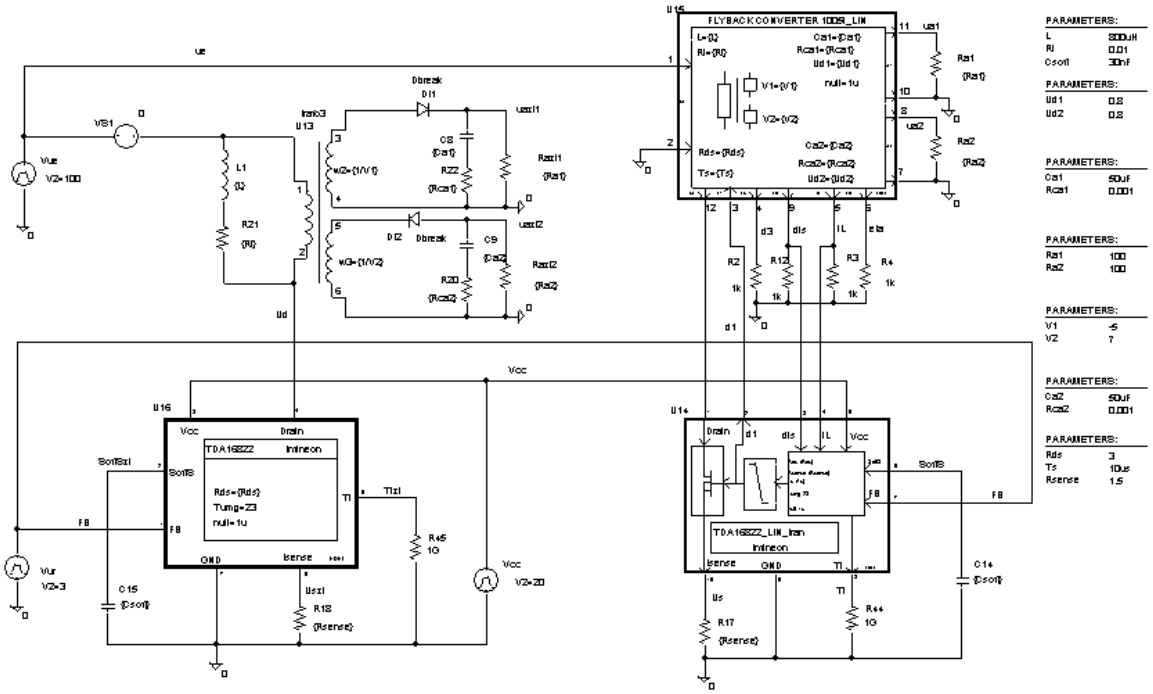

(File: 1005i_zp.sch)

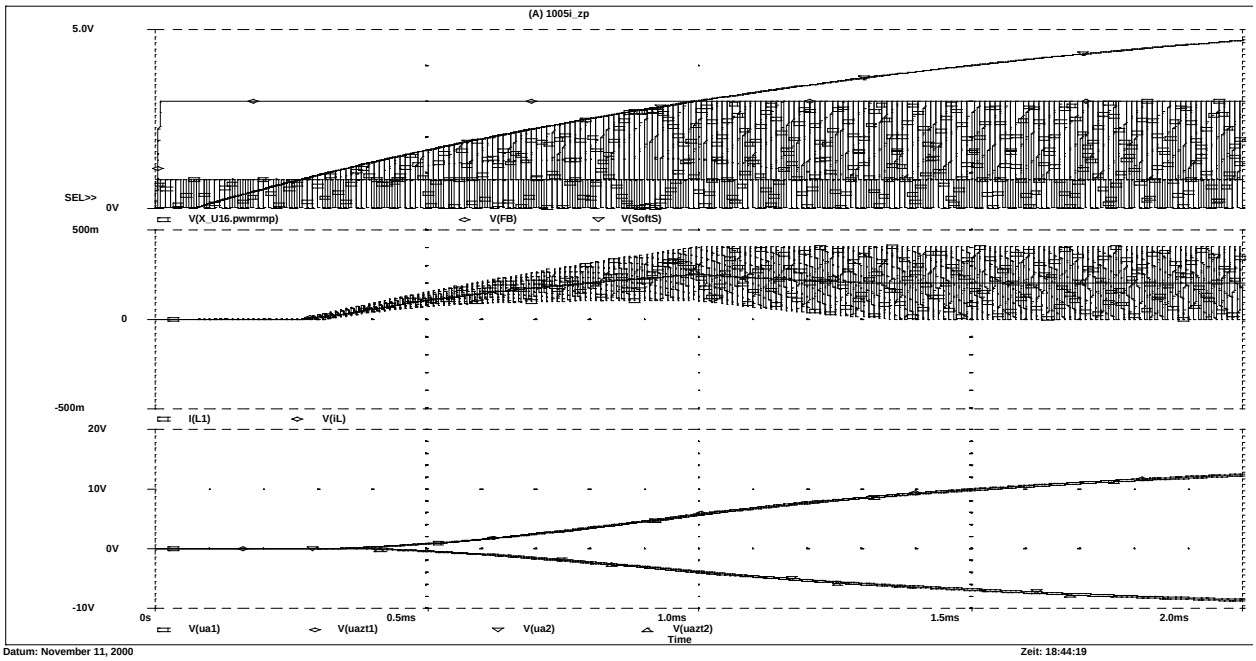

Switch-on characteristic with current loop for a step change of the control voltage *V(FB*) from *V(FB) = 0 to V(FB) = 3V*. The top curve shows how the inductor peak current is limited, first by the soft-start voltage and then by the controller voltage V(FB).

3.4 DC operating points

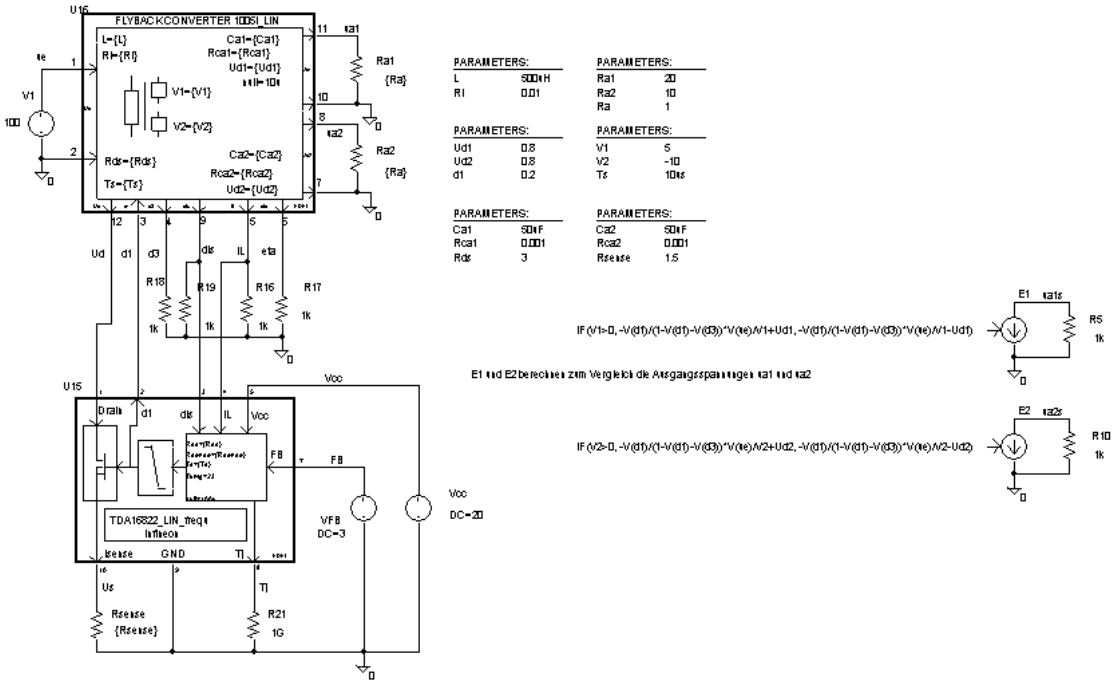

Calculate E1 and E2 for comparison of the output voltages ua1 and ua2

(File: 1005i_gl.sch)

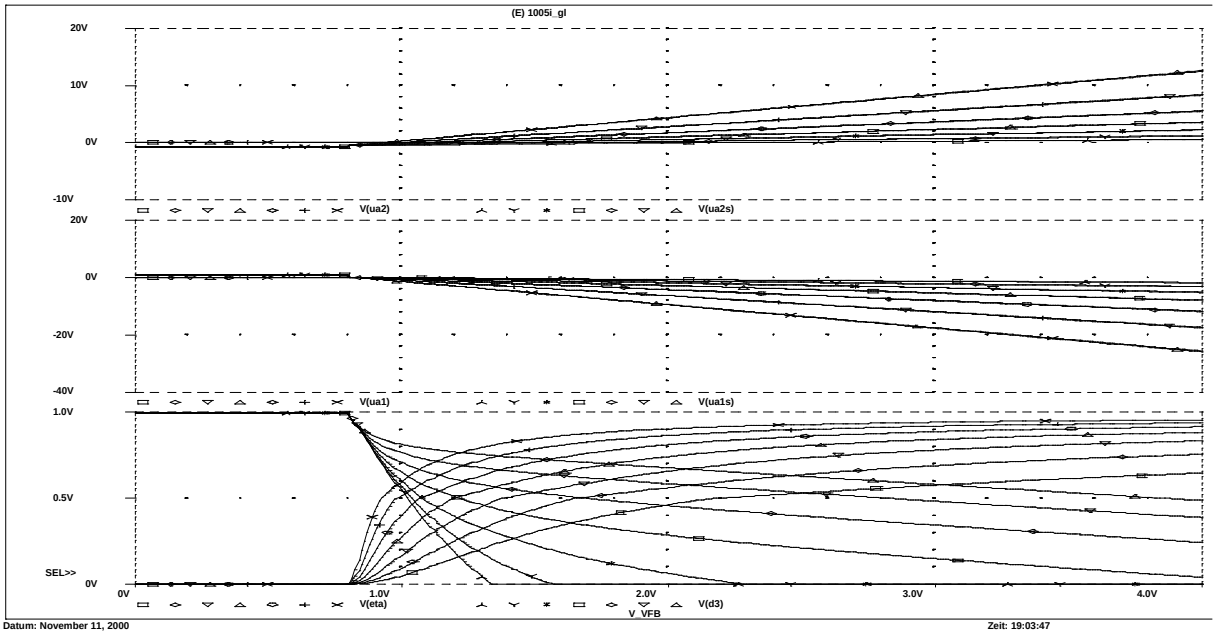

Logarithmic variation of R_a from 1Ω ... 100Ω with 3 values per decade, with U_e = 100V and U_{d1} = U_{d2} = 0.8V. The TDA 16822 is switched on only after $V(FB) \geq 0.8V$.

3.5 Frequency-domain characteristic

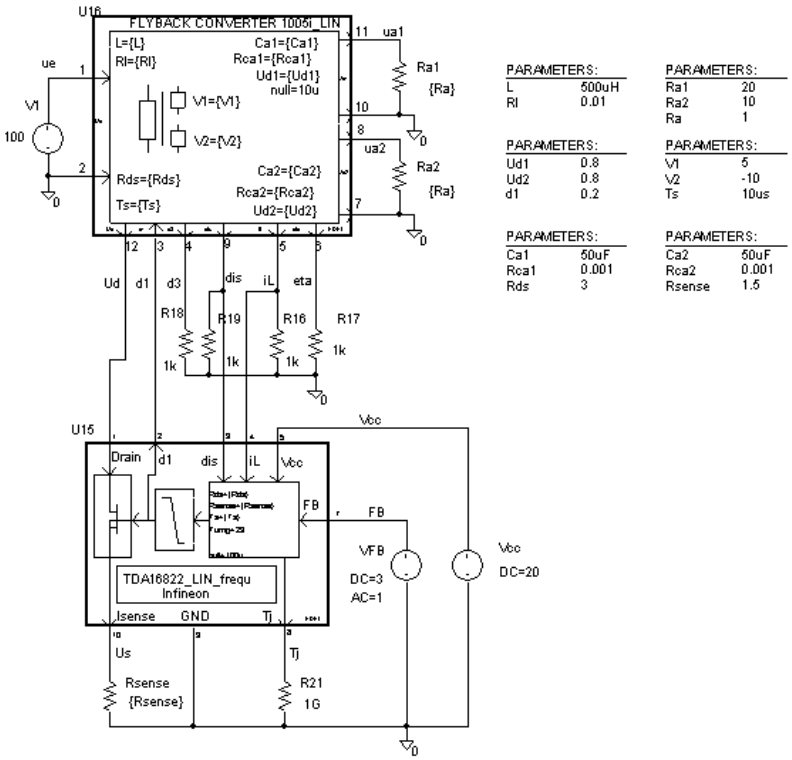

(File: 1005i_fq.sch)

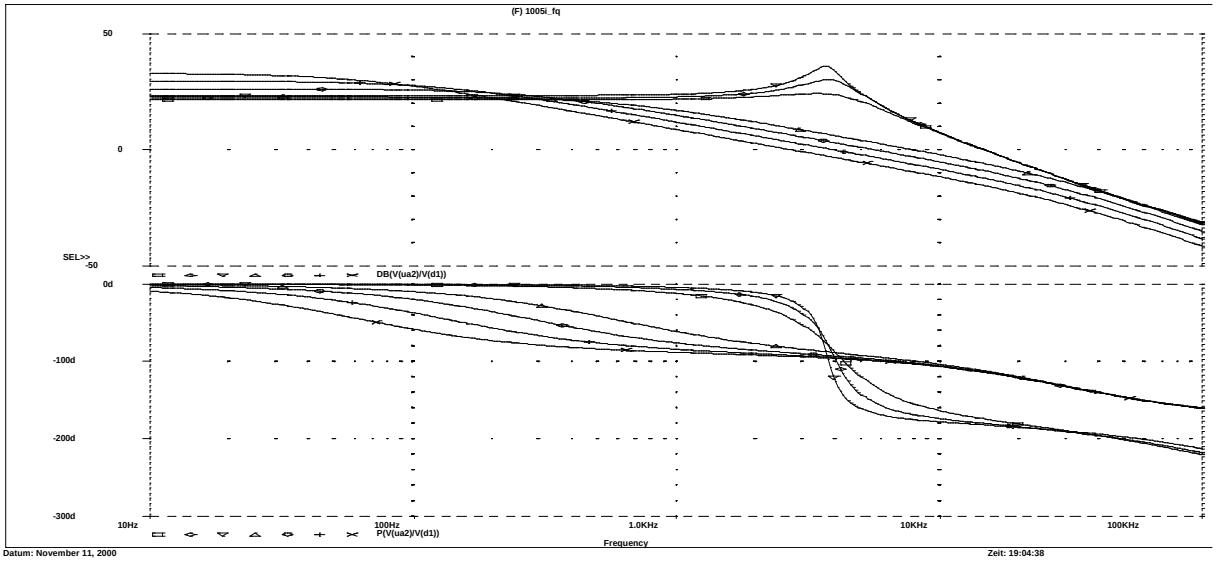

Response characteristic of u_{a2}/d_1. Variation of R_a from 1Ω ... 100Ω with 3 values per decade. The phase response begins at 0 because the transformer ratio V2 is negative.

A Convergence aids

As SPICE was originally developed for simulation of integrated circuits, it makes sense to adapt the OPTIONS to the needs and conditions of switched mode power supplies. Experience shows that the following extreme values are adequate:

Minimum voltage of interest in the circuit:	U_{min} = 1 *m*V.
Minimum current of interest in the circuit:	I_{min} = 1 *m*A.
Greatest resistance in the circuit:	R_{max} = 100*M*Ω.

If the preset relative tolerance (RELTOL) of 0.001 is retained, the following is obtained for the **transient analysis:**

RELTOL = 0.001 (preset)
VNTOL=RELTOL*U_{min} ⇒ VNTOL = 1 uV (preset)
ABSTOL = RELTOL *I_{min} ⇒ ABSTOL = 1uA

In addition, it is advantageous to increase the number of iterations per time increment in the transient analysis;

ITL4 = 40 ... 100.

In the **DC analysis**, i.e. to determine the operating point, SPICE automatically connects a very small conductance in parallel with the switching components. This conductance should be adapted to the circuit:

GMIN = 1/R_{max} ⇒ GMIN = 0.01u

In addition, the number of iterations for determining the operating point should be increased:

ITL1 = 500

This results in the following changes to the OPTIONS:

ABSTOL = 1uA
GMIN = 0.01u
ITL1 = 500
ITL4 = 40

B Notes on the subcircuits

B.1 Activation

All subcircuits are located in the infineon library which can be found in the subdirectory *..\lib*. The library consists of two files:

Infineon1.slb
Infineon1.lib

In order to link the library, the following needs to be entered into SCHEMATICS before the first simulation is carried out:

File / Edit Library / File / Open... / infineon1.slb / Save

The circuits in SCHEMATICS can be called with *the commands Draw / Get New Part / Browse / infineon.slb.*

The subcircuit description is located in ...*lib**infineon1.lib*. You therefore have to make this library known in SCHEMATICS:

*Analysis / Library and Include Files... / infineon.lib / Add Library**

The circuits contained in directory *...\SMPS_examples* are executable only under PSPICE version 7.1 or higher.

In order to use the subcircuits, the grid size must be set in SCHEMATICS:

Options / Display Options / Grid Size 00.05in or Grid Size 01.25 mm

B.2 Adapting the averaged models

The averaged models (files *_mod.sch) of the subcircuits can be customized. To this end, the netlist must be regenerated following the modification:

Analysis / Create Netlist

This netlist can now be opened with the PSPICE text editor:

Analysis / Examine Netlist

All resistors beginning with Rxx must now be removed. This is done most easily with the *Search* command of the editor. Finally, the netlist must be copied into the subcircuit in infineon.lib.

Attention please!

We hereby disclaim any and all warranties, including but not limited to warranties of non-infringement, regarding circuits, descriptions and charts stated herein. Simulation models provided by INFINEON are not warranted by INFINEON as fully representing all of the specifications and operating characteristics of the semiconductor product to which the model relates. The model describe the characteristics of a typical device. In all cases, the current data sheet information for a given device is the final design guideline and the only actual performance specification. Although models can be a useful tool in evaluating device performance, they cannot model exact device performance under all conditions, nor are they intended to replace bread-boarding for final verification. INFINEON therefore does not assume any liability arising from their use. INFINEON reserves the right to change models without prior notice.

Information

For information on simulation-related issues, please check out the INFINEON simulation web page: www.infineon.com/simulate or email to: simulate@infineon.com. For information on technology, delivery terms and conditions and prices of INFINEON devices please contact your nearest Infineon Technologies Office in Germany or our Infineon Technologies Representatives worldwide (see address list).

Warnings

Due to technical requirements components may contain dangerous substances. For information on the types in question please contact your nearest Infineon Technologies Office.

Infineon Technologies Components may only be used in life-support devices or systems with the express written approval of Infineon Technologies, if a failure of such components can reasonably be expected to cause the failure of that life-support device or system, or to affect the safety or effectiveness of that device or system. Life support devices or systems are intended to be implanted in the human body, or to support and/or maintain and sustain and/or protect human life. If they fail, it is reasonable to assume that the health of the user or other persons may be endangered.

Infineon Technologies AG sales offices worldwide – partly represented by Siemens AG

A
Siemens AG Österreich
Erdberger Lände 26
A-1031 Wien
T (+43)1-17 07-3 56 11
Fax (+43)1-17 07-5 59 73
AUS
Siemens Ltd.
885 Mountain Highway
Bayswater,Victoria 3153
T (+61)3-97 21 21 11
Fax (+61)3-97 21 72 75
B
Siemens Electronic Components Benelux
Charleroisesteenweg 116/
Chaussée de Charleroi 116
B-1060 Brussel/Bruxelles
T (+32)2-5 36 69 05
Fax (+32)2-5 36 28 57
Email:components@siemens.nl
BR
Siemens Ltda.
Semiconductores
Avenida Mutinga,3800-Pirituba
05110-901 São Paulo-SP
T (+55)11-39 08 25 64
Fax (+55)11-39 08 27 28
CDN
Infineon Technologies Corporation
320 March Road,Suite 604
Canada,Ontario K2K 2E2
T (+1)6 13-5 91 63 86
Fax (+1)6 13-5 91 63 89
CH
Siemens Schweiz AG
Bauelemente
Freilagerstrasse 40
CH-8047 Zürich
T (+41)1-4 953065
Fax (+41)1-4 955050
D
Infineon Technologies AG
Völklinger Str.2
D-40219 Düsseldorf
T (+49)2 11-3 99 29 30
Fax (+49)2 11-3 99 14 81
Infineon Technologies AG
Werner-von-Siemens-Platz 1
D-30880 Laatzen (Hannover)
T (+49)5 11-8 77 22 22
Fax (+49)5 11-8 77 15 20
Infineon Technologies AG
Von-der-Tann-Straße 30
D-90439 Nürnberg
T (+49)9 11-6 54 76 99
Fax (+49)9 11-6 54 76 24
Infineon Technologies AG
Weissacher Straße 11
D-70499 Stuttgart
T (+49)7 11-1 37 33 14
Fax (+49)7 11-1 37 24 48
D
Infineon Technologies AG
Halbleiter Distribution
Richard-Strauss-Straße 76
D-81679 München
T (+49)89-92 21 40 86
Fax (+49)89-92 21 20 71
DK
Siemens A/S
Borupvang 3
DK-2750 Ballerup
T (+45)44 77-44 77
Fax (+45)44 77-40 17
E
Siemens S.A.
Dpto.Componentes
Ronda de Europa,5
E-28760 Tres Cantos-Madrid
T (+34)91-5 14 71 51
Fax (+34)91-5 14 70 13

F
Infineon Technologies France,
39/47,Bd.Ornano
F-93527 Saint-Denis CEDEX2
T (+33)1-49 22 31 00
Fax (+33)1-49 22 28 01
FIN
Siemens Components Scandinavia
P.O .Bo x 6 0
FIN-02601 Espoo (Helsinki)
T (+3 58)10-5 11 51 51
Fax (+3 58)10-5 11 24 95
Email:
scs@components.siemens.se
GB
Infineon Technologies
Siemens House
Oldbury
GB-Bracknell,Berkshire
RG12 8FZ
T (+44)13 44-39 66 18
Fax (+44)13 44-39 66 32
H
Simacomp Kft.
Lajos u.103
H-1036 Budapest
T (+36)1-4 57 16 90
Fax (+36)1-4 57 16 92
HK
Infineon Technologies
Hong Kong Ltd.
Suite 302,Level 3,
Festival Walk,
80 Tat Chee Avenue,
Yam Yat Tsuen,
Kowloon Tong
Hong Kong
T (+8 52)28 32 05 00
Fax (+8 52)28 27 97 62
I
Siemens S..A.
Semiconductor Sales
Via Piero e Alberto Pirelli,10
I-20126 Milano
T (+39)02-66 76 -1
Fax (+39)02-66 76 43 95
IND
Siemens Ltd.
Components Division
No.84 Keonics Electronic City
Hosur Road
Bangalore 561 229
T (+91)80-8 52 11 22
Fax (+91)80-8 52 11 80
Siemens Ltd.
CMP Div,5th Floor
4A Ring Road,IP Estate
New Delhi 110 002
T (+91)11-3 31 99 12
Fax (+91)11-3 31 96 04
Siemens Ltd.
CMP Div,4th Floor
130,Pandurang Budhkar Marg,
Worli
Mumbai 400 018
T (+91)22-4 96 21 99
Fax (+91)22-4 96 22 01
IRL
Siemens Ltd.
Electronic Components Division
8,Raglan Road
IRL-Dublin 4
T (+3 53)1-2 16 23 42
Fax (+3 53)1-2 16 23 49
IL
Nisko Ltd.
2A,Habarzel St.
P.O.Box 58151
61580 Tel Aviv –Isreal
T (+9 72)3 -7 65 73 00
Fax (+9 72)3 -7 65 73 33

J
Siemens Components K.K.
Talanawa Park Tower 12F &17F
3-20-14,Higashi-Gotanda,
Shinagawa-ku
Tokyo
T (+81)3-54 49 64 11
Fax (+81)3 -54 49 64 01
MAL
Infineon Technologies AG
Sdn Bhd
Bayan Lepas Free Industrial Zone1
11900 Penang
T (+60)4 -6 44 99 75
Fax (+60)4 -6 41 48 72
N
Siemens Components Scandinavia
Østre Aker vei 24
Postboks 10,Veitvet
N-0518 Oslo
T (+47)22-63 30 00
Fax (+47)22-68 49 13
Email:
scs@components.siemens.se
NL
Siemens Electronic Components Benelux
Postbus 16068
NL-2500 BB Den Haag
T (+31)70-3 33 20 65
Fax (+31)70-3 33 28 15
Email:components@siemens.nl
NZ
Siemens Auckland
300 Great South Road
Greenland
Auckland
T (+64)9-5 20 30 33
Fax (+64)9-5 20 15 56
P
Siemens S.A.
an Componentes Electronicos
R.Irmaos Siemens,1
Alfragide
P-2720-093 Amadora
T (+351)1-4 17 85 90
Fax (+351)1-4 17 80 83
PK
Siemens Pakistan Engineering Co.Ltd.
PO Box 1129,Islamabad 44000
23 West Jinnah Ave
Islamabad
T (+92)51-21 22 00
Fax (+92)51-21 16 10
PL
Siemens SP.z.o.o.
ul.Zupnicza 11
PL-03-821 Warszawa
T (+48)22-8 70 91 50
Fax (+48)22-8 70 91 59
ROK
Siemens Ltd.
Asia Tower,10th Floor
726 Yeoksam-dong,Kang-nam Ku
CPO Box 3001
Seoul 135-080
T (+82)2-5 27 77 00
Fax (+82)2-5 27 77 79
RUS
INTECH electronics
ul.Smolnaya,24/1203
RUS-125 445 Moskva
T (+7)0 95 -4 51 97 37
Fax (+7)0 95 -4 51 86 08
S
Siemens Components Scandinavia
Österögatan 1,Box 46
S-164 93 Kista
T (+46)8-7 03 35 00
Fax (+46)8-7 03 35 01
Email:
scs@components.siemens.se

RC
Infineon Technologies
Asia Pacific Pte.Ltd.
Taiwan Branch
10F,No.136 Nan King East Road
Section 23,Taipei
T (+8 86)2-27 73 66 06
Fax (+8 86)2-27 71 20 76
SGP
Infineon Technologies Asia Pacific,Pte.Ltd.
168 Kallang Way
Singapore 349 253
T (+65)8 40 06 10
Fax (+65)7 42 62 39
USA
Infineon Technologies Corporation
1730 North First Street
San Jose,CA 95112
T (+1)4 08-5 01 60 00
Fax (+1)4 08-5 01 24 24
Siemens Components,Inc.
Optoelectronics Division
19000 Homestead Road
Cupertino,CA 95014
T (+1)4 08-2 57 79 10
Fax (+1)4 08-7 25 34 39
Siemens Components,Inc.
Special Products Division
186 Wood Avenue South
Iselin,NJ 08830-2770
T (+1)7 32-9 06 43 00
Fax (+1)7 32-6 32 28 30
VRC
Infineon Technologies
Hong Kong Ltd.
Beijing Office
Room 2106,Building A
Vantone New World Plaza
No.2 Fu Cheng Men Wai Da Jie
Jie
100037 Beijing
T (+86)10 -68 57 90 -06,-07
Fax (+86)10 -68 57 90 08
Infineon Technologies
Hong Kong Ltd.
Chengdu Office
Room14J1,Jinyang Mansion
58 Tidu Street
Chengdu,
Sichuan Province 610 016
T (+86)28-6 61 54 46 /79 51
Fax (+86)28 -6 61 01 59
Infineon Technologies
Hong Kong Ltd.
Shanghai Office
Room1101,Lucky Target Square
No.500 Chengdu Road North
Shanghai 200003
T (+86)21-63 6126 18 /19
Fax (+86)21-63 61 11 67
Infineon Technologies
Hong Kong Ltd.
Shenzhen Office
Room 1502,Block A
Tian An International Building
Renim South Road
Shenzhen 518 005
T (+86)7 55 -2 28 91 04
Fax (+86)7 55-2 28 02 17
ZA
Siemens Ltd.
Components Division
P.O.B.3438
Halfway House 1685
T (+27)11-6 52 -27 02
Fax (+27)11-6 52 20 42