Features

- Integrated analog input Class D audio amplifier in a small 5 x 6 mm PQFN package
- High peak music power output
- No mechanical heatsink required
- Split or single power supply
- Differential or single-ended input
- Over-current, over-temperature and under voltage protections with self-reset function
- Start and stop click noise reduction
- High noise immunity
- RoHS compliant

Typical Applications

- Home theatre systems
- Docking station audio systems
- PC audio systems
- Musical instruments
- Karaoke amplifiers
- Game consoles
- Powered speaker systems
- General purpose audio power amplifiers

Product Summary

Topology	Half-Bridge, Full-Bridge
*IR4301 Output power (Typical, THD+N=10%)	160 W/ 4 Ω
	120 W/ 3 Ω
*IR4321 Output power (Typical, THD+N=10%)	90 W/ 4 Ω
	135 W/ 2 Ω
*IR4311 Output power (Typical, THD+N=10%)	35 W/ 4 Ω
	45 W/ 3 Ω
*Residual noise (AES-17, IHF-A, typical)	250 µVrms
*THD+N (1kHz, 1W, 4 Ω, typical)	0.02 %

* In typical application example

Package

5x6mm PQFN22

Typical Connection

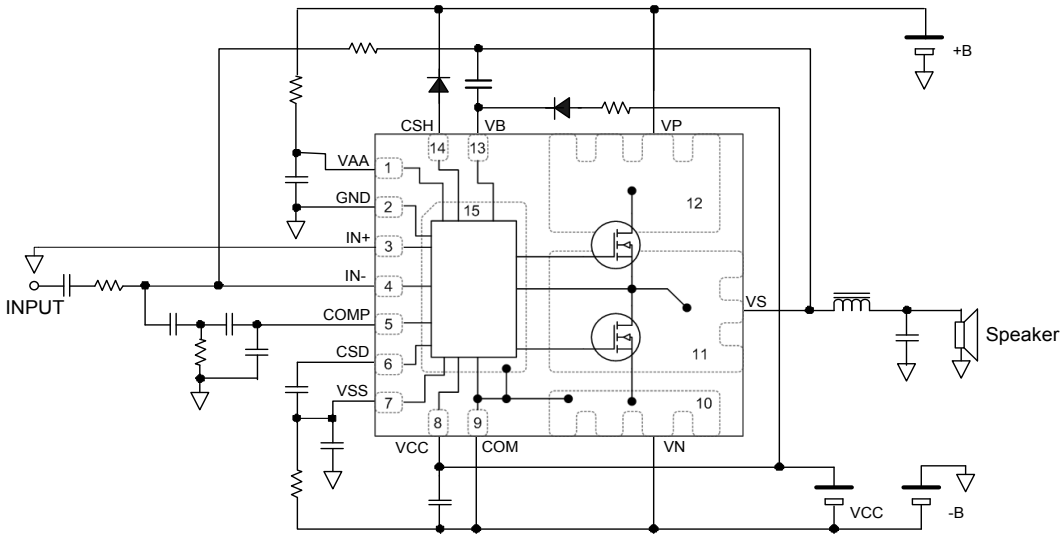

 © 2013 International Rectifier

Table of Contents	Page
Typical Connection Diagram	1
Qualification Information	4
Absolute Maximum Ratings	5
Recommended Operating Conditions	7
Electrical Characteristics	8
Functional Block Diagram	11
Input/Output Pin Equivalent Circuit Diagram	12
Lead Definitions	13
Lead Assignments	13
Package Details	14
Part Marking Information	15
Ordering Information	15

 © 2013 International Rectifier

Description

The IR43x1 integrates PWM controller and digital audio MOSFETs forming a high performance Class D audio amplifier. As a result of fully optimized MOSFETs co-packed with a dedicated controller IC, the IR43X1operates without mechanical heatsink attached in a typical music playback usage. High voltage ratings and noise immunity in the controller IC ensures reliable operation over various environmental conditions. A small 5x6 mm PQFN package enhances the benefit of smaller size of Class D topology. The IR43x1 are a lead-free, ROHS compliant.

Typical Connection Diagram

1. Inverting Amplifier

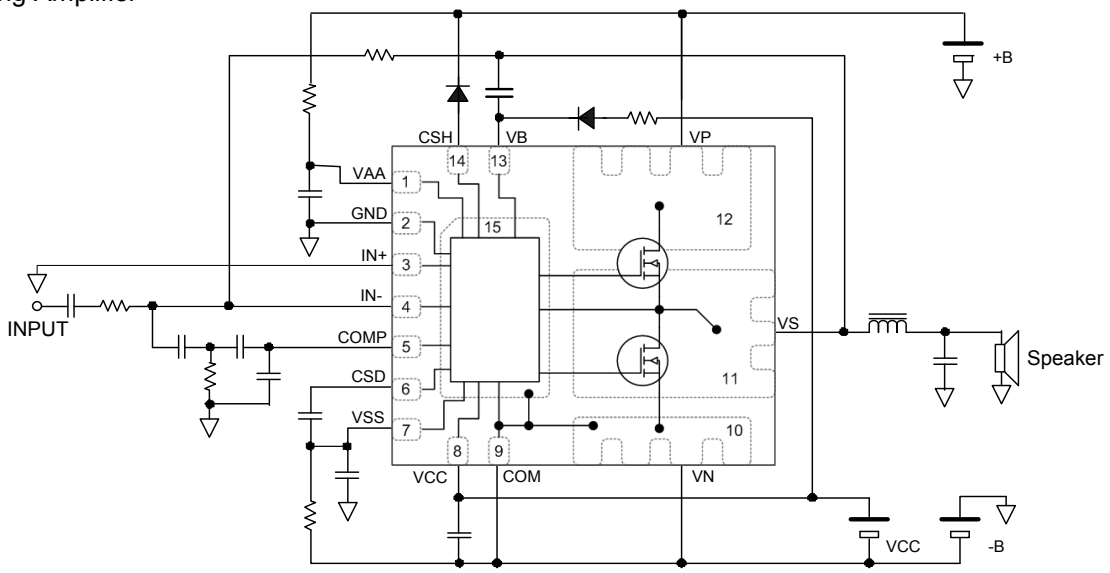

2. Differential Amplifier

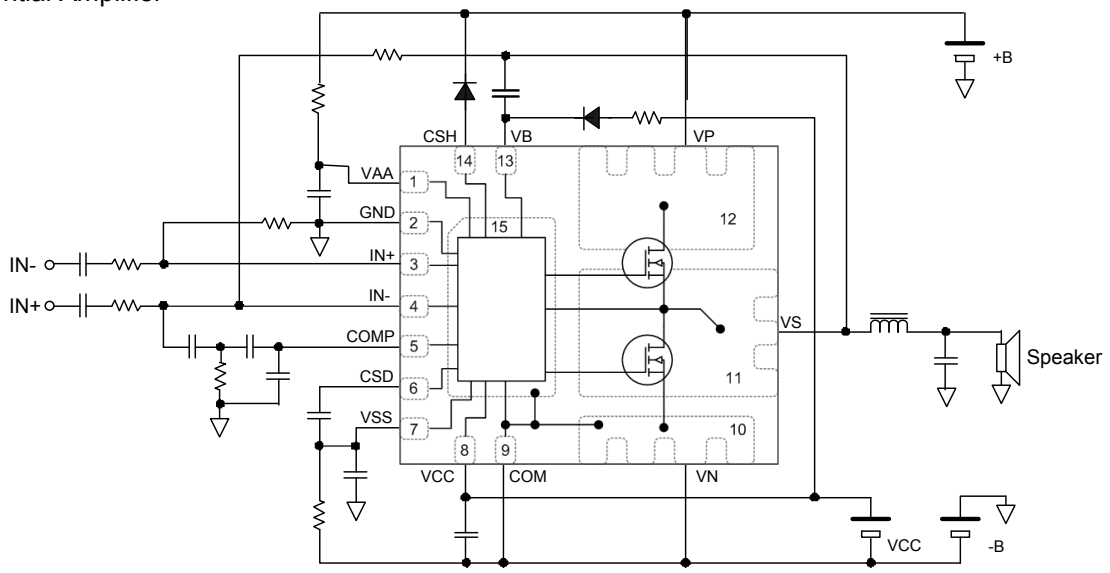

 © 2013 International Rectifier

3. Single Power Supply

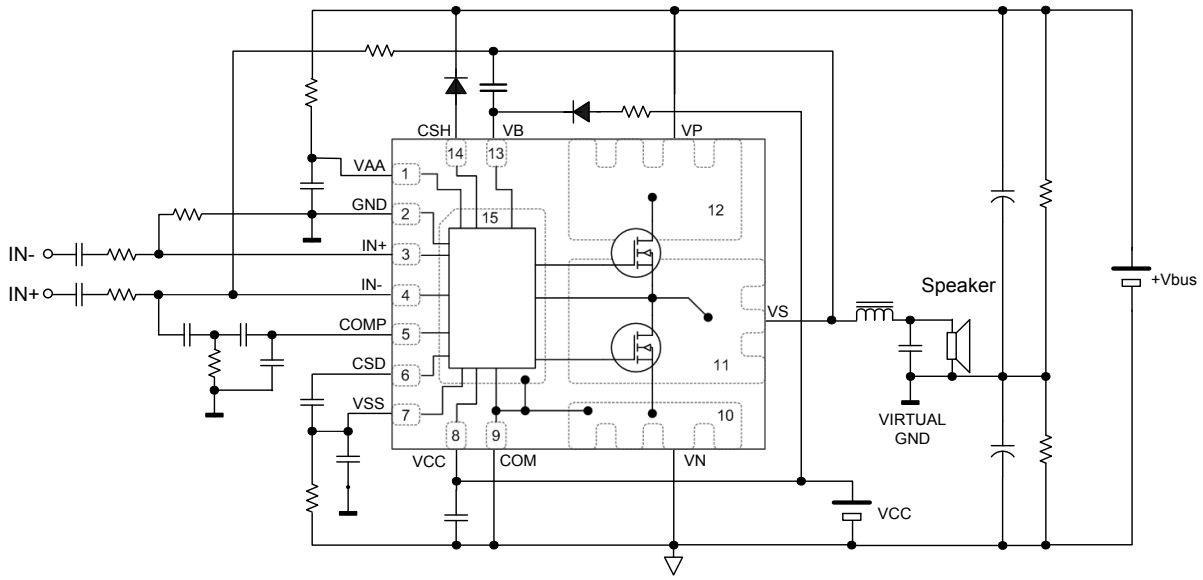

Qualification Information†

Qualification Level		Industrial††
		Comments: This family of ICs has passed JEDEC's Industrial qualification. IR's Consumer qualification level is granted by extension of the higher Industrial level.
Moisture Sensitivity Level		MSL2 (per IPC/JEDEC J-STD-020C)
ESD	**Machine Model**	Class B (per JEDEC standard EIA/JESD22-A115)
	Human Body Model	Class 2 (per EIA/JEDEC standard JESD22-A114)
IC Latch-Up Test		Class I, Level A (per JESD78)
RoHS Compliant		Yes

† Qualification standards can be found at International Rectifier's web site http://www.irf.com/

†† Higher qualification ratings may be available should the user have such requirements. Please contact your International Rectifier sales representative for further information.

††† Higher MSL ratings may be available for the specific package types listed here. Please contact your International Rectifier sales representative for further information.

 © 2013 International Rectifier

Absolute Maximum Ratings

Absolute Maximum Ratings indicate sustained limits beyond which damage to the device may occur. All voltage parameters are absolute voltages referenced to COM=VN; all currents are defined positive into any lead. The Thermal Resistance and Power Dissipation ratings are measured under board mounted and still air conditions.

Symbol	Definition		Min	Max	Units
V_P	VP pin positive power supply rail voltage	IR4301	-	80	V
		IR4321	-	60	
		IR4311	-	40	
V_B	High side floating supply voltage	IR4301	-0.3	95	
		IR4321	-0.3	75	
		IR4311	-0.3	55	
V_{CSH}	CSH pin input voltage		V_S -0.3	V_B +0.3	
V_S	High side floating supply voltage††		V_B -15	V_B +0.3	
V_{CC}	Low side supply voltage††		-0.3	15	
V_{AA}	Floating input positive supply voltage††	IR4301	-0.3	100	
		IR4321	-0.3	70	
		IR4311	-0.3	50	
V_{SS}	Floating input negative supply voltage††		-1 (See I_{SSZ})	GND +0.3	
V_{IN+}	Floating input supply ground voltage		V_{SS} -0.3	V_{AA} +0.3	
I_{IN}	Input current between IN- and IN+ pins†		-	±3	mA
V_{CSD}	CSD pin input voltage		V_{SS} -0.3	V_{AA} +0.3	V
V_{COMP}	COMP pin input voltage		V_{SS} -0.3	V_{AA} +0.3	
I_{AAZ}	Floating input supply zener clamp current††		-	20	mA
I_{SSZ}	Floating input negative supply zener clamp current††		-	20	
I_{CCZ}	Low side supply zener clamp current†††		-	20	
I_{BSZ}	Floating supply zener clamp current†††		-	20	
dV_S/dt	Allowable Vs voltage slew rate		-	50	V/ns
dV_{SS}/dt	Allowable Vss voltage slew rate†††		-	50	V/ms
$Id_{@\ 25°C}$	Continuous output current, from VP to VS, VS to VN, V_{CC}=10V, V_B-V_S=10V	IR4301	-	6.5	A
		IR4321	-	7.0	
		IR4311	-	3.6	
$Id_{@\ 100°C}$	Continuous output current, from VP to VS, VS to VN, V_{CC}=10V, V_B-V_S=10V	IR4301	-	5.4	
		IR4321	-	5.8	
		IR4311	-	2.9	
I_{DM}	Pulsed output current, from VP to VS, VS to VN, V_{CC}=10V, V_B-V_S=10V †††††	IR4301	-	26	
		IR4321	-	28	
		IR4311	-	15	
Pd	Power dissipation†††† @ T_C = 25°C	IR4301	-	31	W
		IR4321	-	31	
		IR4311	-	9	

 © 2013 International Rectifier

Rth_{JC}	Thermal resistance, junction to case††††	IR4301	-	4	°C/W
		IR4321	-	4	
		IR4311	-	13	
T_{JIC}	Control IC junction temperature		-	150	°C
T_{JFET}	FET junction temperature		-	150	
T_S	Storage Temperature		-55	150	
T_L	Lead temperature (Soldering, 10 seconds)		-	300	

† IN- and IN+ contain clamping diodes between the two pins.
†† V_{AA} -V_{SS}, Vcc-COM and VB-VS contain internal shunt zener diodes. Please note that the voltage ratings of these can be limited by the clamping current.
††† For the rising and falling edges of step signal of 10V. Vss=15V to 200V.
†††† Per MOSFET
††††† Repetitive rating, pulse width limited by max. junction temperature

 © 2013 International Rectifier

Recommended Operating Conditions

For proper operation, the device should be used within the recommended conditions below. The Vss and Vs offset ratings are tested with supplies biased at COM=VN, V_{AA}-V_{SS}=9.6V, V_{CC}=12V and V_B-V_S=12V. All voltage parameters are absolute voltages referenced to COM; all currents are defined positive into any lead.

Symbol	Definition		Min.	Max.	Units
V_P	Positive power supply rail voltage, without heatsink	IR4301	-	62	V
		IR4321	-	50	
		IR4311	-	32	
	Positive power supply rail voltage, with heatsink	IR4301	-	68	
		IR4321	-	50	
		IR4311	-	32	
V_B	High side floating supply absolute voltage		V_S +10	V_S +14	
V_S	High side floating supply offset voltage	IR4301	†	80	
		IR4321	†	60	
		IR4311	†	40	
V_{AA}	Floating input positive supply voltage††		V_{SS} + 4.5	V_{SS} + 15	
V_{SS}	Floating input negative supply voltage††	IR4301	0	80	
		IR4321	0	60	
		IR4311	0	40	
I_{AAZ}	Floating input supply zener clamp current††		1	15	mA
I_{SSZ}	Floating input negative supply zener clamp current††		1	15	
V_{CC}	Low side fixed supply voltage		10	15	V
V_{IC}	IN- and IN+ pins common mode input voltage		V_{SS} + 2	V_{AA} - 2	
V_{IN-}	Inverting input voltage		V_{IN+} -0.5	V_{IN+} +0.5	
V_{CSD}	CSD pin input voltage		V_{SS}	V_{AA}	
V_{COMP}	COMP pin input voltage		V_{SS}	V_{AA}	
C_{COMP}	COMP pin phase compensation capacitor to GND		1	-	nF
V_{CSH}	CSH pin input voltage		V_S	V_B	V
dVss/dt	Allowable Vss voltage slew rate upon power-up†††		-	50	V/ms
f_{SW}	Switching Frequency		-	500	kHz
T_A	Ambient Temperature		-40	100	°C

† Logic operational for Vs equal to –5V to +80V. Logic state held for Vs equal to –5V to –VBS.
†† GND input voltage is limited by I_{AAZ} and I_{SSZ}.
††† Vss ramps up from 0V to 70V.

 © 2013 International Rectifier

Electrical Characteristics

V_{CC},V_{BS}= 12 V, V_{SS}=V_S=V_N=COM=0V, V_{AA}=9.6V and T_A=25°C unless otherwise specified.

Symbol	Definition	Min	Typ	Max	Units	Test Conditions
Low Side Supply						
UV_{CC+}	Vcc supply UVLO positive threshold	8.4	8.9	9.4	V	
UV_{CC-}	Vcc supply UVLO negative threshold	8.2	8.7	9.2	V	
UV_{CCHYS}	UV_{CC} hysteresis	-	0.2	-	V	
I_{QCC}	Low side quiescent current	-	-	3	mA	
I_{CC}	Low side operating current	-	5	-	mA	f=400kHz
V_{CLAMPL}	Low side zener diode clamp voltage	14.7	15.3	16.2	V	I_{CC}=5mA
High Side Floating Supply						
UV_{BS+}	High side well UVLO positive threshold	8.0	8.5	9.0	V	
UV_{BS-}	High side well UVLO negative threshold	7.8	8.3	8.8	V	
UV_{BSHYS}	UV_{BS} hysteresis	-	0.2	-	V	
I_{QBS}	High side quiescent current	-	-	2.4	mA	
V_{CLAMPH}	High side zener diode clamp voltage	14.7	15.3	16.2	V	I_{BS}=5mA
Floating Input Supply						
UV_{AA+}	VA+, VA- floating supply UVLO positive threshold from V_{SS}	8.2	8.7	9.2	V	V_{SS} =0V, GND pin floating
UV_{AA-}	VA+, VA- floating supply UVLO negative threshold from V_{SS}	7.7	8.2	8.7	V	V_{SS} =0V, GND pin floating
UV_{AAHYS}	UV_{AA} hysteresis	-	0.5	-	V	V_{SS} =0V, GND pin floating
I_{QAA0}	Floating Input positive quiescent supply current	-	1	2	mA	V_{AA}=9.6V, V_{SS} =0V, V_{CSD} =VSS
I_{QAA1}	Floating Input positive quiescent supply current	-	2	3	mA	V_{AA}=9.6V, V_{SS} =0V, V_{CSD} =VAA
I_{QAA2}	Floating Input positive quiescent supply current	-	2.5	4	mA	V_{AA}=9.6V, V_{SS} =0V, V_{CSD} =GND
I_{LKM}	Floating input side to Low side leakage current	-	-	50	µA	V_{AA}=V_{SS}=V_{GND}= 100V
$V_{CLAMPM+}$	V_{AA} floating supply zener diode clamp voltage, positive, with respect to GND	4.9	5.1	5.4	V	I_{AA}=5mA, I_{SS}=5mA, V_{GND}=0V, V_{CSD} =VSS
$V_{CLAMPM-}$	V_{SS} floating supply zener diode clamp voltage, negative, with respect to GND	-5.4	-5.1	-4.9	V	I_{AA}=5mA, I_{SS}=5mA, V_{GND}=0V, V_{CSD} =VSS

 © 2013 International Rectifier

Electrical Characteristics (cont'd)

V_{CC},V_{BS}= 12 V, V_{SS}=V_S=V_N=COM=0V, V_{AA}=9.6V and T_A=25°C unless otherwise specified.

Symbol	Definition	Min	Typ	Max	Units	Test Conditions
Audio Input (V_{GND}=0, V_{AA}=4.8V, V_{SS}=-4.8V)						
V_{OS}	Input offset voltage	-18	0	18	mV	
I_{BIN}	Input bias current	-	-	40	nA	
GBW	Small signal bandwidth	-	9	-	MHz	C_{COMP}=1nF, Rf=0
g_m	OTA transconductance	-	10	-	mS	V_{IN+}=0V, V_{IN-} =10mV
G_V	OTA gain	50	-	-	dB	
PWM						
Vth_{PWM}	PWM comparator threshold in COMP	-	(V_{AA} -V_{SS})/2	-	V	
f_{OTA}	COMP pin star-up local oscillation frequency	0.7	1.0	1.5	MHz	V_{CSD} =GND
Ton	COMP to VS rising edge propagation delay	-	370	-	ns	
Toff	COMP to VS trailing edge propagation delay	-	320	-	ns	
DT	Deadtime: Low-side turn-off to High-side turn-on (DT_{LO-HO}) & High-side turn-off to Low-side turn-on (DT_{HO-LO})	-	50	-	ns	VP=30V, VN=-30V
Power MOSFET (FET1, FET2) (IR4301)						
$V_{(BR)DSS}$	Drain-to-Source breakdown voltage	80	-	-	V	V_{GS}=0V, I_D=250uA
$R_{DS(ON)}$	FET on resistance	-	39	50	mΩ	V_{GS}=10V, I_D=3.3A
Qg	Total gate charge	-	7.3	-	nC	
I_{LK0}	VP leakage current, VS=VN	-	-	20	µA	V_P=80V, V_{CSD} =VSS
I_{LK1}	VP leakage current, VS=VP	-	-	50	µA	
Power MOSFET (FET1, FET2) (IR4321)						
$V_{(BR)DSS}$	Drain-to-Source breakdown voltage	60	-	-	V	V_{GS}=0V, I_D=250uA
$R_{DS(ON)}$	FET on resistance	-	30	40	mΩ	V_{GS}=10V, I_D=3.3A
Qg	Total gate charge	-	8.3	-	nC	
I_{LK0}	VP leakage current, VS=VN	-	-	20	µA	V_P=60V, V_{CSD} =VSS
I_{LK1}	VP leakage current, VS=VP	-	-	50	µA	
Power MOSFET (FET1, FET2) (IR4311)						
$V_{(BR)DSS}$	Drain-to-Source breakdown voltage	40	-	-	V	V_{GS}=0V, I_D=250uA
$R_{DS(ON)}$	FET on resistance	-	44	56	mΩ	V_{GS}=10V, I_D=3.6A
Qg	Total gate charge	-	4.5	-	nC	
I_{LK0}	VP leakage current, VS=VN	-	-	20	µA	V_P=40V, V_{CSD} =VSS
I_{LK1}	VP leakage current, VS=VP	-	-	50	µA	

 © 2013 International Rectifier

Electrical Characteristics (cont'd)

V_{CC},V_{BS}= 12 V, V_{SS}=V_S=V_N=COM=0V, V_{AA}=9.6V and T_A=25°C unless otherwise specified.

Symbol	Definition	Min	Typ	Max	Units	Test Conditions
Protection						
I_{OCP}	Positive OC threshold	-	16	-	A	
I_{OCN}	Negative OC threshold	-	-16	-	A	
Vth1	CSD pin shutdown release threshold	0.62xV_{AA}	0.70xV_{AA}	0.78xV_{AA}	V	
Vth2	CSD pin self-reset threshold	0.26xV_{AA}	0.30xV_{AA}	0.34xV_{AA}	V	
I_{CSD+}	CSD pin discharge current	70	100	130	µA	V_{CSD} = V_{SS} +4.8V
I_{CSD-}	CSD pin charge current	70	100	130	µA	V_{CSD} = V_{SS} +4.8V
t_{SD}	Shutdown propagation delay from V_S < Vth1 to Shutdown	-	-	250	ns	COMP = V_{SS}
t_{OCP}	Propagation delay time from I_O > I_{OCP} to Shutdown	-	-	500	ns	COMP = V_{SS}
t_{OCN}	Propagation delay time from I_O < I_{OCN} to Shutdown	-	-	500	ns	COMP = V_{SS}
T_{SD}	Over temperature shutdown threshold in controller IC	-	105	-	ºC	
T_{SDHYS}	Over temperature shutdown threshold hysteresis	-	7	-	ºC	

 © 2013 International Rectifier

Functional Bock Diagram

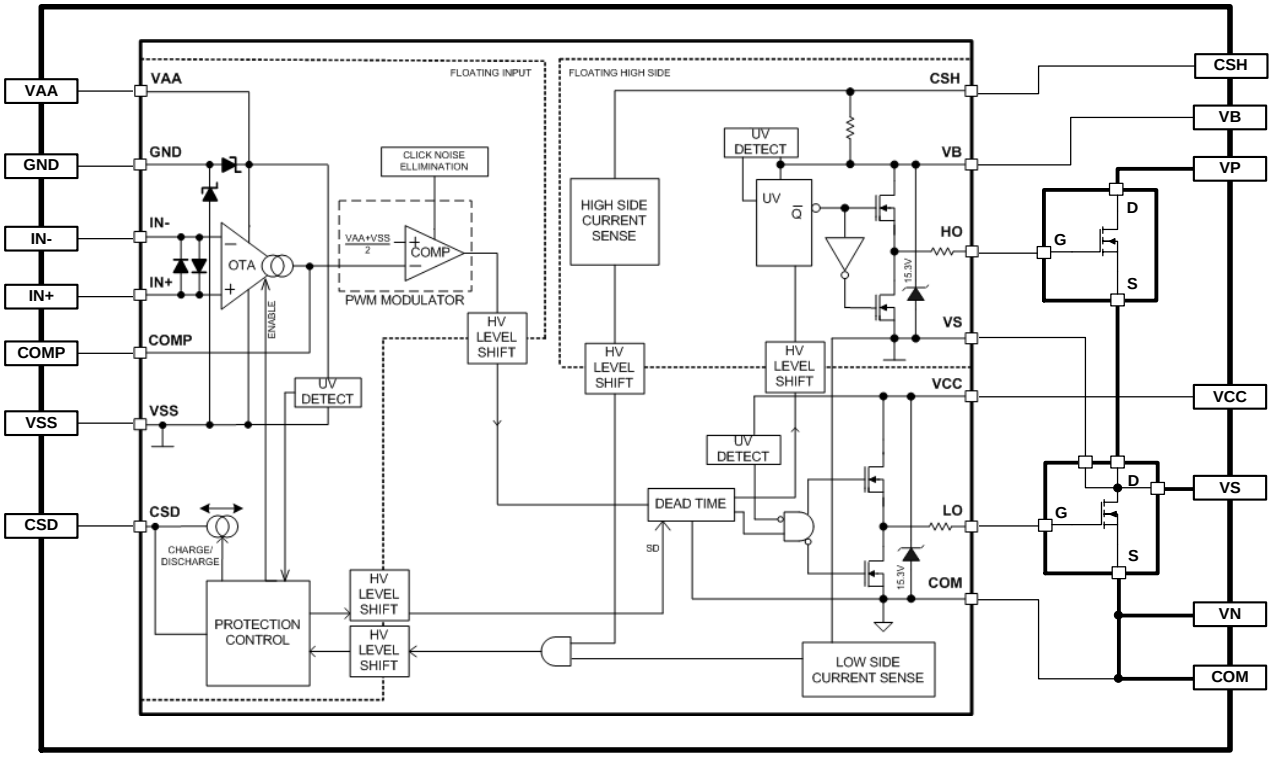

47

 © 2013 International Rectifier

Input/Output Pin Equivalent Circuit Diagrams

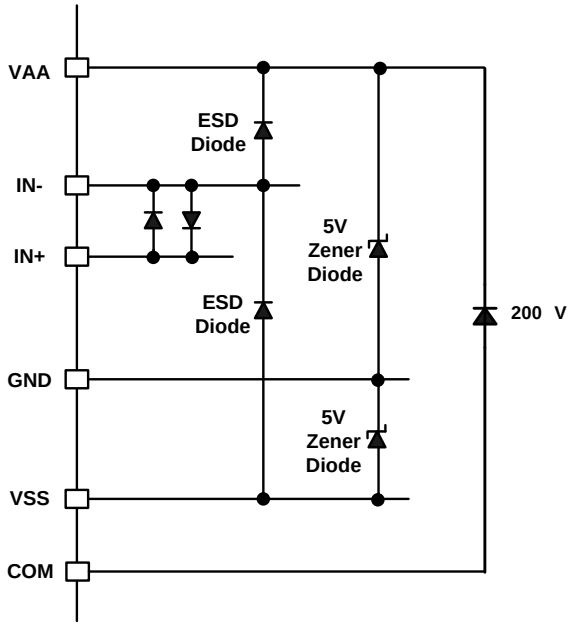

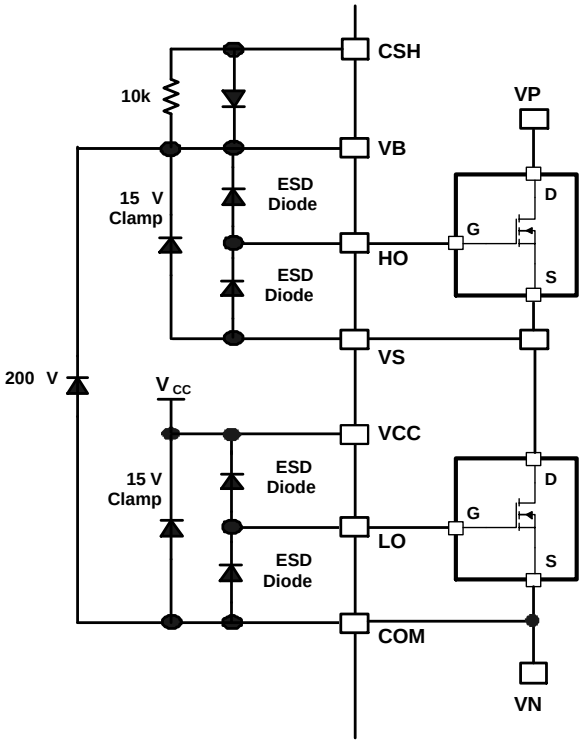

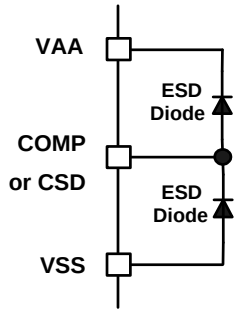

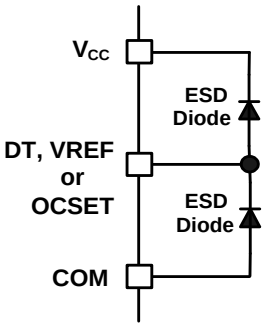

 © 2013 International Rectifier

Lead Definitions

Pin #	Symbol	Description
1	VAA	Floating input positive supply
2	GND	GND for internal shunt zener diodes to VAA and VSS
3	IN+	Analog non-inverting input
4	IN-	Analog inverting input
5	COMP	PWM comparator input
6	CSD	Shutdown timing capacitor / shutdown input
7	VSS	Floating input negative supply
8	VCC	Low side supply
9	COM	Low side supply return, internally connected to VN
10	VN	Negative power supply, internally connected to COM externally
11	VS	PWM output
12	VP	Positive power supply
13	VB	High side floating supply, referenced to VS
14	CSH	High side over current sensing input, referenced to VS
15	SUB	Internally connected to COM (Do not use as supply return)

Lead Assignments (Top View)

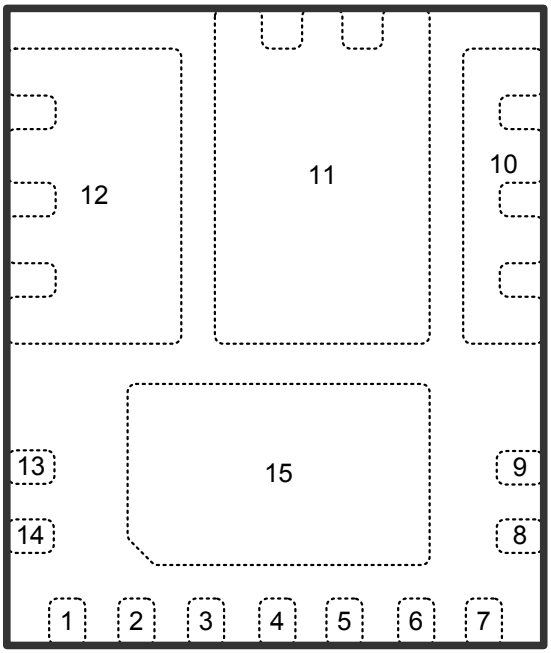

 © 2013 International Rectifier

Package Details

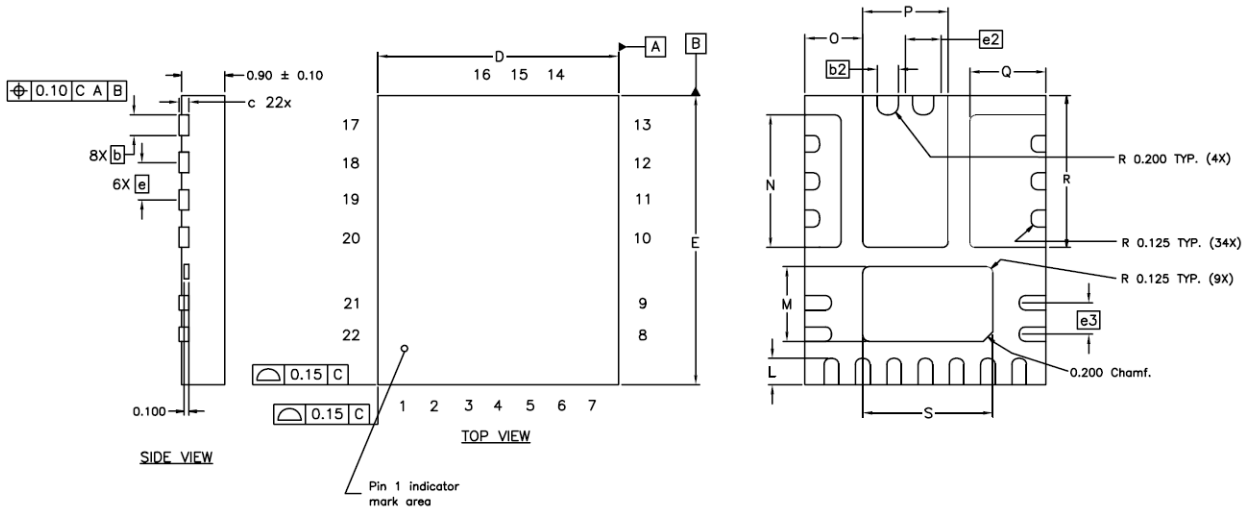

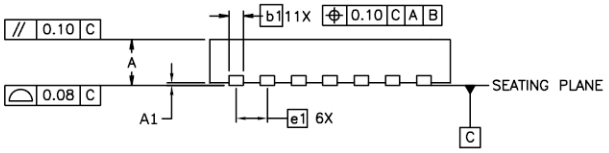

Outline PQFN 5x6 D				
DIM	MILLIMETERS		INCHES	
	MIN	MAX	MIN	MAX
A	0.800	1.000	.0315	.0394
A1	0.000	0.050	.0000	.0020
b	0.375	0.475	.0148	.0187
b1	0.250	0.350	.0098	.0138
b2	0.388	0.488	.0153	.0192
c	0.203 REF.		.0080 REF.	
D	5.000 BASIC		.1969 BASIC	
E	6.000 BASIC		.2362 BASIC	
e	0.775 BASIC		.0305 BASIC	
e1	0.650 BASIC		.0256 BASIC	
e2	0.738 BASIC		.0291 BASIC	
e3	0.650 BASIC		.0256 BASIC	
L	0.500	0.600	.0197	.0236
M	1.500	1.600	.0591	.0630
N	2.700	2.800	.1063	.1102
O	1.150	1.250	.0453	.0492
P	1.725	1.825	.0679	.0719
Q	1.525	1.625	.0600	.0640
R	3.100	3.200	.1220	.1260
S	2.650	2.750	.1043	.1083

 © 2013 International Rectifier

Board Mounting Information

Refer to Application Note AN-1170 Audio Power Quad Flat No-Lead (PQFN) Board Mounting Application Note.

Part Marking Information

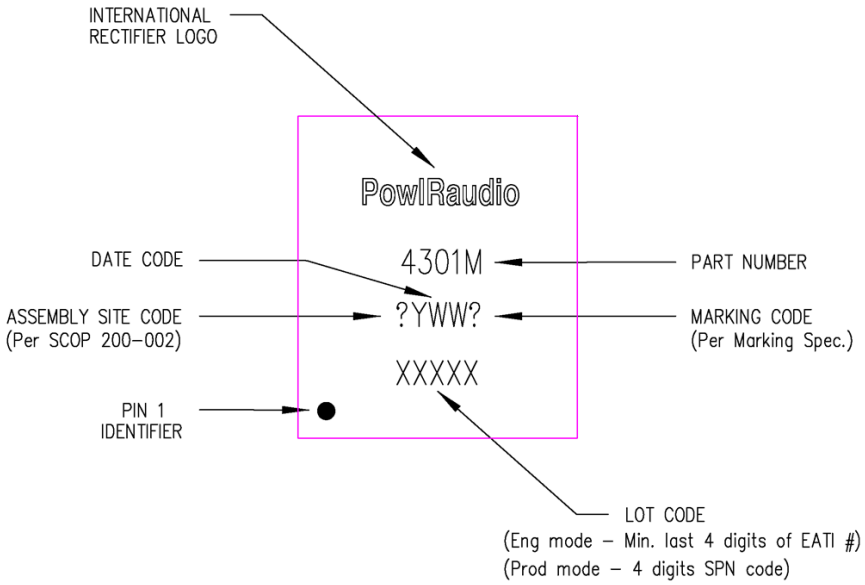

Ordering Information

Base Part Number	Package Type	Standard Pack		Complete Part Number
		Form	Quantity	
IR4301M	PQFN22 5x6mm	Tape and Reel	4000	IR4301MTRPBF
IR4321M	PQFN22 5x6mm	Tape and Reel	4000	IR4321MTRPBF
IR4311M	PQFN22 5x6mm	Tape and Reel	4000	IR4311MTRPBF

The information provided in this document is believed to be accurate and reliable. However, International Rectifier assumes no responsibility for the consequences of the use of this information. International Rectifier assumes no responsibility for any infringement of patents or of other rights of third parties which may result from the use of this information. No license is granted by implication or otherwise under any patent or patent rights of International Rectifier. The specifications mentioned in this document are subject to change without notice. This document supersedes and replaces all information previously supplied.

For technical support, please contact IR's Technical Assistance Center
http://www.irf.com/technical-info/

WORLD HEADQUARTERS:
101 N. Sepulveda Blvd., El Segundo, California 90245
Tel: (310) 252-7105

 © 2013 International Rectifier