IRFZ924NPbF

$V_{(BR)DSS}$	-55V
$R_{DS(on)}$ max.	0.175Ω
I_D	-12A

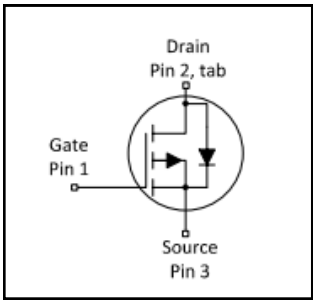

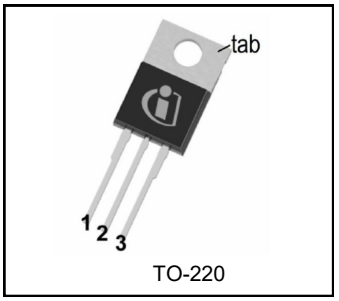

G	D	S
Gate	Drain	Source

Features

- Advanced Process Technology
- Dynamic dv/dt Rating
- 175°C Operating Temperature
- P-Channel
- Fast Switching
- Fully Avalanche Rated
- Lead-Free

Description

Fifth Generation HEXFET Power MOSFETs utilizes the advanced processing techniques to achieve extremely low on-resistance per silicon area. This benefit, combined with the fast switching speed and ruggedized device design that HEXFET power MOSFETs are well known for, provides the designer with an extremely efficient and reliable device for use in a wide variety of applications.

The TO-220 package is universally preferred for all commercial-industrial applications at power dissipation levels to approximately 50 watts. The low thermal resistance and low package cost of the TO-220 contribute to its wide acceptance throughout the industry.

Base part number	Package Type	Standard Pack		Orderable Part Number
		Form	Quantity	
IRF9Z24NPbF	TO-220	Tube	50	IRF9Z24NPbF

Absolute Maximum Rating

Symbol	Parameter	Max.	Units
I_D @ T_C = 25°C	Continuous Drain Current, V_{GS} @ -10V	-12	A
I_D @ T_C = 100°C	Continuous Drain Current, V_{GS} @ -10V	-8.5	
I_{DM}	Pulsed Drain Current ①	-48	
P_D @T_C = 25°C	Maximum Power Dissipation	45	W
	Linear Derating Factor	0.30	W/°C
V_{GS}	Gate-to-Source Voltage	± 20	V
E_{AS}	Single Pulse Avalanche Energy②	96	mJ
I_{AR}	Avalanche Current ①	-7.2	A
E_{AR}	Repetitive Avalanche Energy ①	4.5	mJ
dv/dt	Peak Diode Recovery dv/dt③	-5.0	V/ns
T_J T_{STG}	Operating Junction and Storage Temperature Range	-55 to + 175	°C
	Soldering Temperature, for 10 seconds (1.6mm from case)	300	
	Mounting torque, 6-32 or M3 screw	10 lbf•in (1.1N•m)	

Thermal Resistance

Symbol	Parameter	Typ.	Max.	Units
$R_{\theta JC}$	Junction-to-Case	——	3.3	°C/W
$R_{\theta CS}$	Case-to-Sink, Flat, Greased Surface	0.50	——	
$R_{\theta JA}$	Junction-to-Ambient	——	62	

Static @ T_J = 25°C (unless otherwise specified)

	Parameter	Min.	Typ.	Max.	Units	Conditions
$V_{(BR)DSS}$	Drain-to-Source Breakdown Voltage	-55	——	——	V	V_{GS} = 0V, I_D = -250μA
$\Delta V_{(BR)DSS}/\Delta T_J$	Breakdown Voltage Temp. Coefficient	——	-0.05	——	V/°C	Reference to 25°C, I_D = -1mA
$R_{DS(on)}$	Static Drain-to-Source On-Resistance	——	——	0.175	Ω	V_{GS} = -10V, I_D = -7.2A ④
$V_{GS(th)}$	Gate Threshold Voltage	-2.0	——	-4.0	V	V_{DS} = V_{GS}, I_D = -250μA
gfs	Forward Trans conductance	2.5	——	——	S	V_{DS} = -25V, I_D = -7.2A
I_{DSS}	Drain-to-Source Leakage Current	——	——	-25	μA	V_{DS} = -55V, V_{GS} = 0V
		——	——	-250		V_{DS} = -44V,V_{GS} = 0V,T_J =150°C
I_{GSS}	Gate-to-Source Forward Leakage	——	——	-100	nA	V_{GS} = -20V
	Gate-to-Source Reverse Leakage	——	——	100		V_{GS} = 20V

Dynamic Electrical Characteristics @ T_J = 25°C (unless otherwise specified)

Q_g	Total Gate Charge	——	——	19	nC	I_D = -7.2A
Q_{gs}	Gate-to-Source Charge	——	——	5.1		V_{DS} = -44V
Q_{gd}	Gate-to-Drain Charge	——	——	10		V_{GS} = -10V, See Fig. 6 and 13 ④
$t_{d(on)}$	Turn-On Delay Time	——	13	——	ns	V_{DD} = -28V
t_r	Rise Time	——	55	——		I_D = -7.5A
$t_{d(off)}$	Turn-Off Delay Time	——	23	——		R_G= 24Ω
t_f	Fall Time	——	37	——		R_D= 3.7Ω, See Fig. 10 ④
L_D	Internal Drain Inductance	——	4.5	——	nH	Between lead, 6mm (0.25in.) from package and center of die contact
L_S	Internal Source Inductance	——	7.5	——		
C_{iss}	Input Capacitance	——	350	——	pF	V_{GS} = 0V
C_{oss}	Output Capacitance	——	170	——		V_{DS} = -25V
C_{rss}	Reverse Transfer Capacitance	——	92	——		f = 1.0MHz, See Fig.5

Diode Characteristics

	Parameter	Min.	Typ.	Max.	Units	Conditions
I_S	Continuous Source Current (Body Diode)	——	——	-12	A	MOSFET symbol showing the integral reverse p-n junction diode. 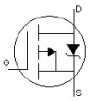
I_{SM}	Pulsed Source Current (Body Diode) ①	——	——	-48		
V_{SD}	Diode Forward Voltage	——	——	-1.6	V	T_J = 25°C,I_S = -7.2A,V_{GS} = 0V ④
t_{rr}	Reverse Recovery Time	——	47	71	ns	T_J = 25°C ,I_F = -7.2A
Q_{rr}	Reverse Recovery Charge	——	84	130	nC	di/dt = -100A/μs ④

Notes:

① Repetitive rating; pulse width limited by max. junction temperature. (See fig. 11).
② Starting T_J = 25°C, L = 3.7mH , R_G = 25Ω, I_{AS} = -7.2A . (See fig. 12)
③ $I_{SD} \leq$ -7.2A, di/dt $\leq$ –280A/μs, $V_{DD} \leq V_{(BR)DSS}$, $T_J \leq$ 175°C.
④ Pulse width $\leq$ 300μs; duty cycle $\leq$ 2%.

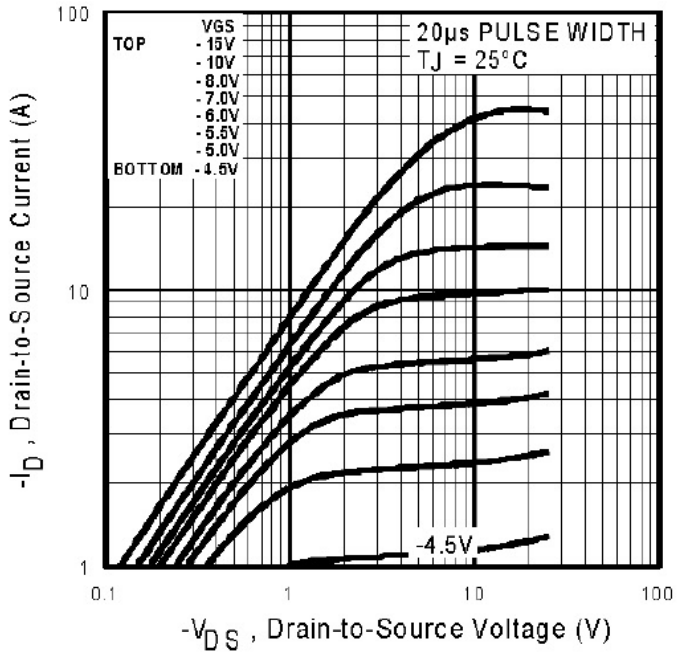

Fig. 1 Typical Output Characteristics

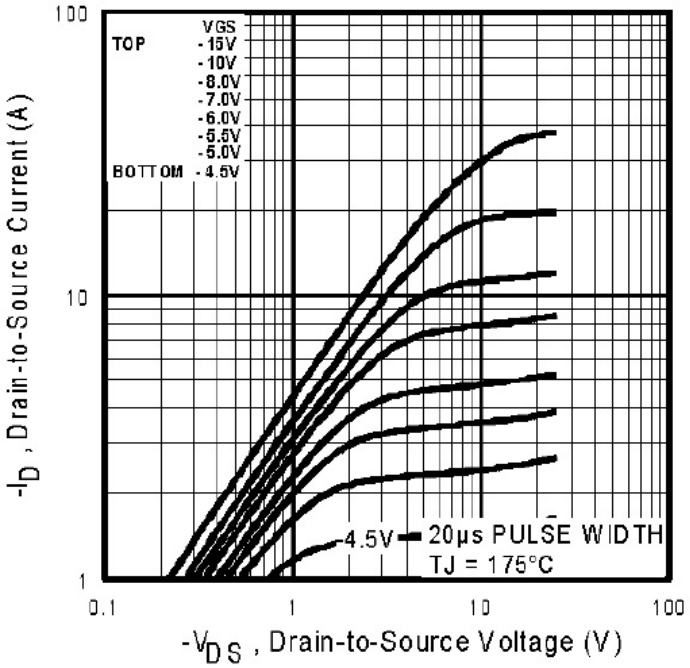

Fig. 2 Typical Output Characteristics

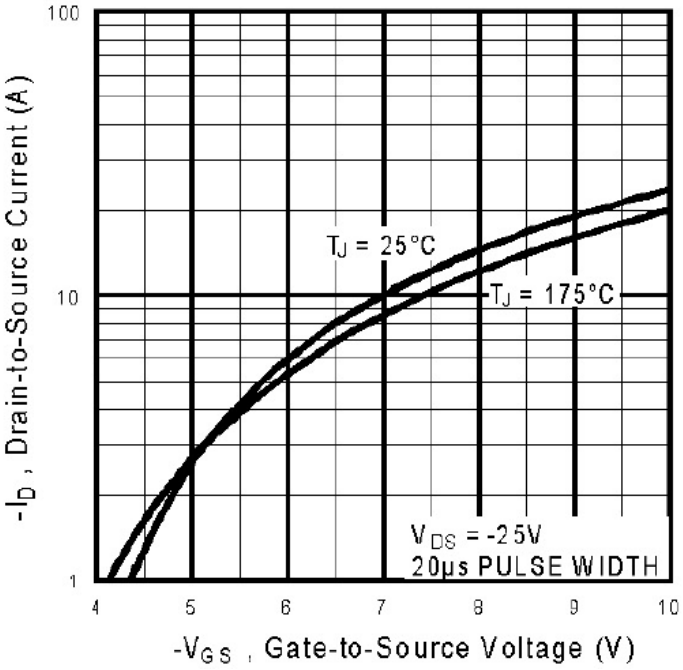

Fig. 3 Typical Transfer Characteristics

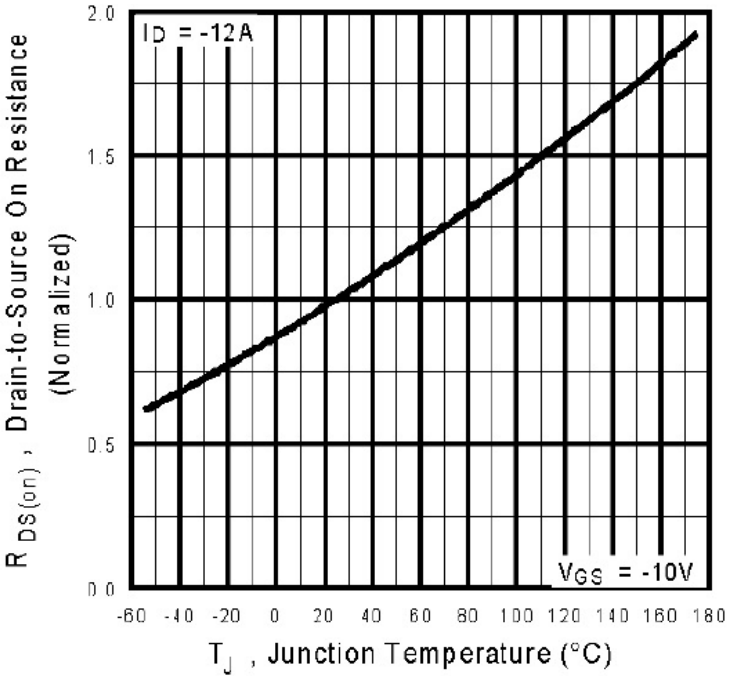

Fig. 4 Normalized On-Resistance vs. Temperature

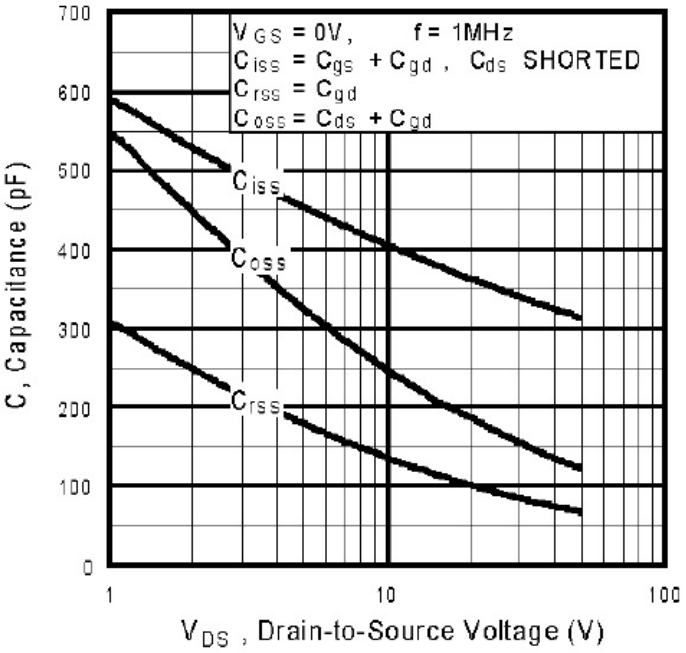

Fig 5. Typical Capacitance vs. Drain-to-Source Voltage

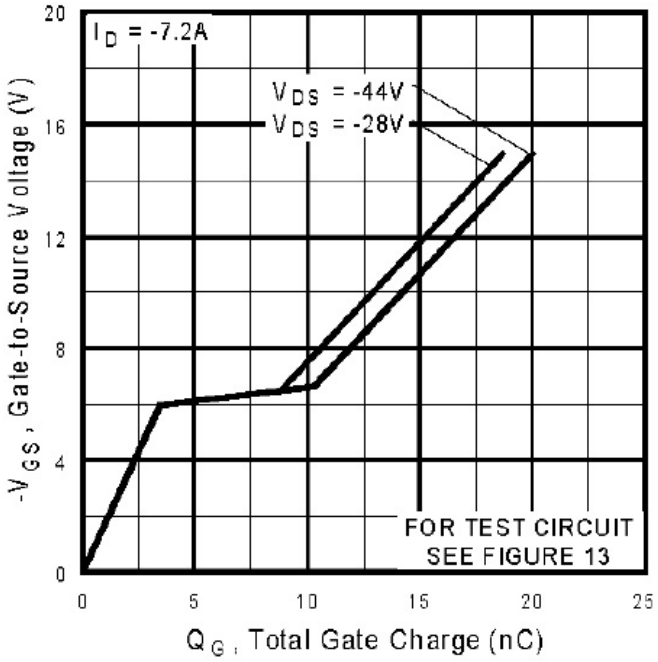

Fig 6. Typical Gate Charge vs. Gate-to-Source Voltage

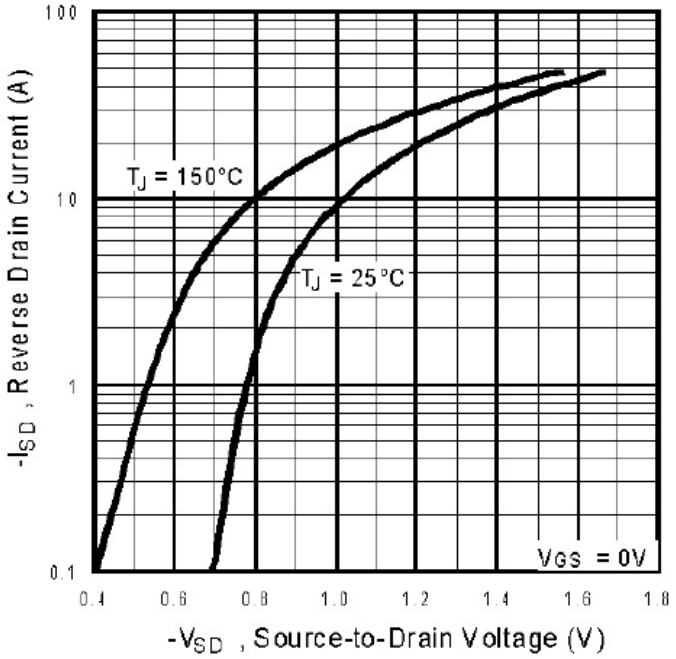

Fig. 7 Typical Source-to-Drain Diode Forward Voltage

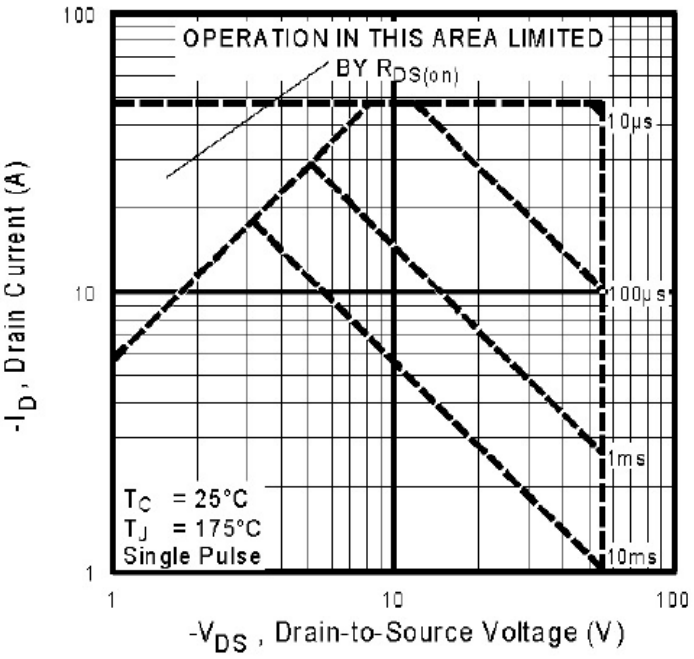

Fig 8. Maximum Safe Operating Area

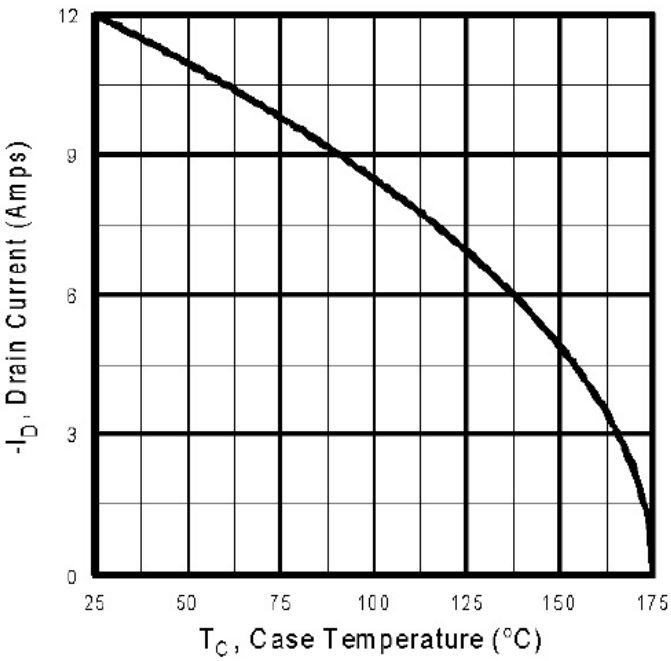

Fig 9. Maximum Drain Current vs. Case Temperature

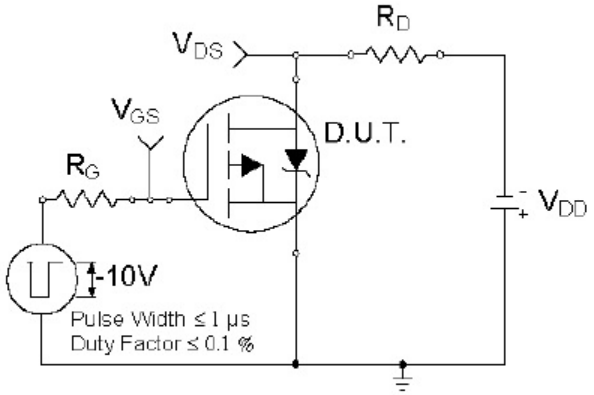

Fig 10b. Switching Time Test Circuit

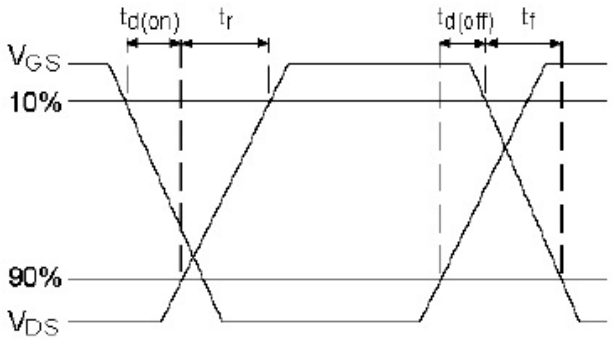

Fig 10b. Switching Time Waveforms

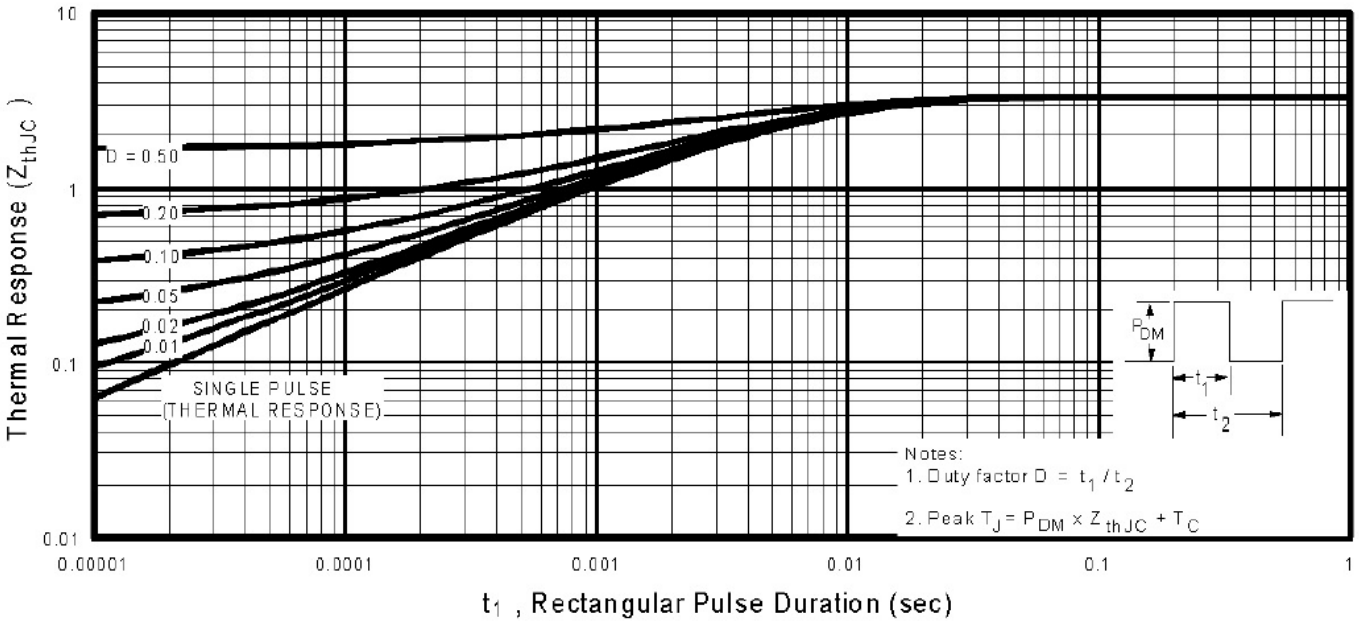

Fig 11. Maximum Effective Transient Thermal Impedance, Junction-to-Case

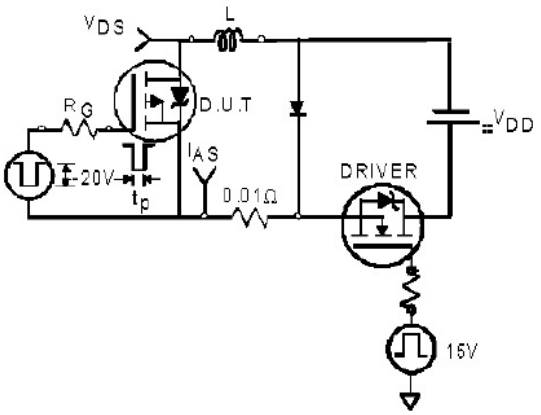

Fig. 12a. Unclamped Inductive Test Circuit

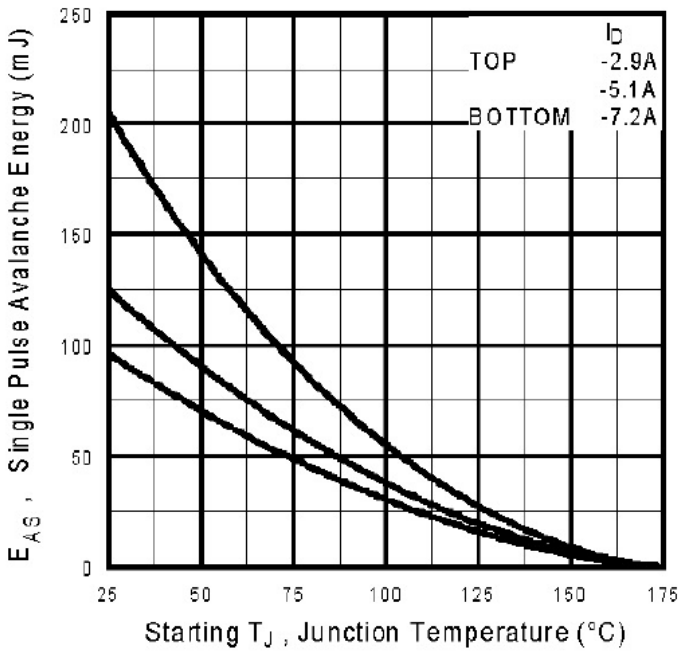

Fig 12c. Maximum Avalanche Energy vs. Drain Current

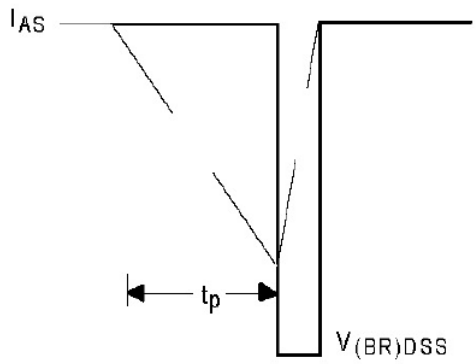

Fig. 12b. Unclamped Inductive Waveforms

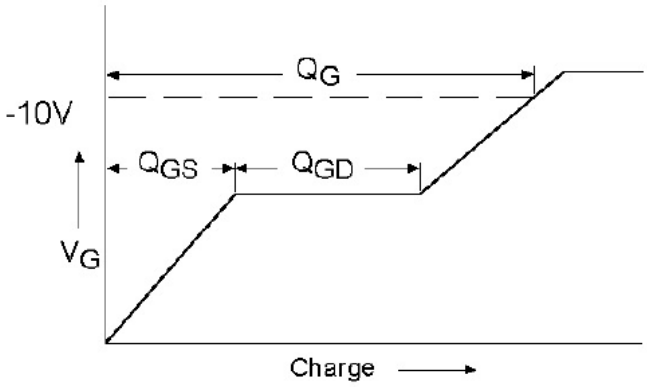

Fig 13a. Basic Gate Charge Waveform

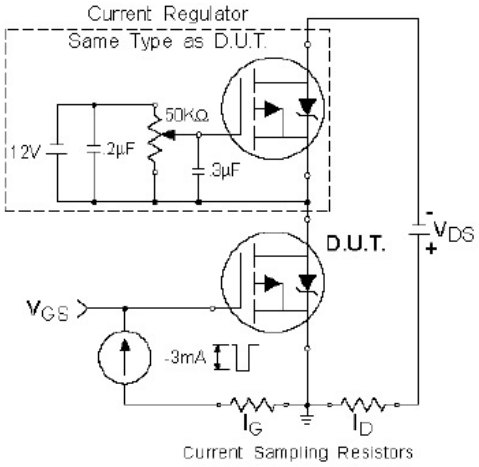

Fig 13b. Gate Charge Test Circuit

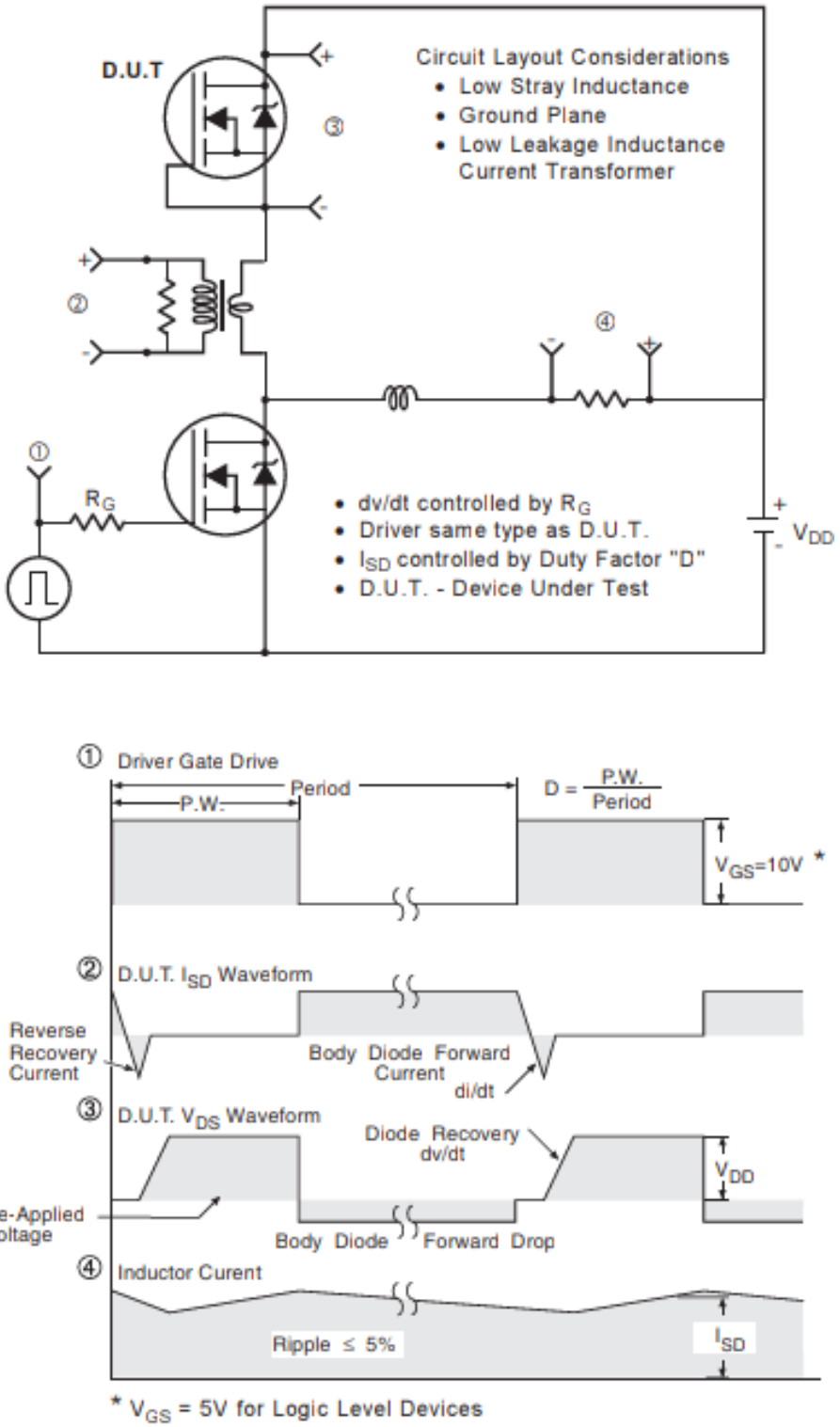

Fig 14. Peak Diode Recovery dv/dt Test Circuit for N-Channel HEXFET® Power MOSFETs

TO-220 Package Outline (Dimensions are shown in millimeters (inches))

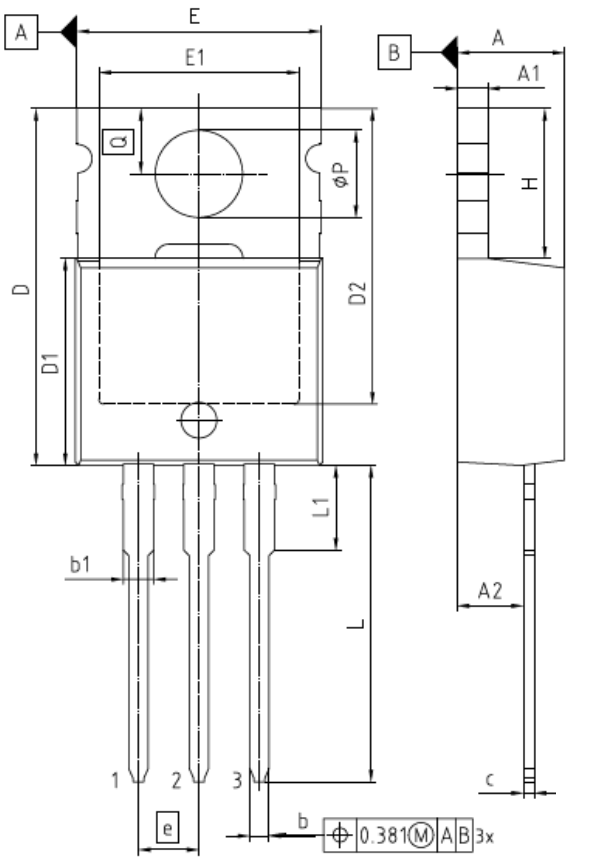

NOTES:
DIMENSIONS DO NOT INCLUDE MOLD FLASH, PROTRUSION OR GATE BURRS
GATE BURRS ARE LESS THAN 0.5 mm

PACKAGE - GROUP NUMBER:	PG-TO220-3-U05	
DIMENSIONS	MILLIMETERS	
	MIN.	MAX.
A	3.56	4.83
A1	1.14	1.40
A2	2.03	2.92
b	0.38	1.01
b1	1.14	1.78
c	0.36	0.61
D	14.22	16.51
D1	8.38	9.20
D2	11.68	12.88
E	9.65	10.67
E1	6.86	8.89
e	2.54	
N	3	
H	5.84	6.86
L	12.70	14.73
L1	3.56	4.06
øP	3.54	4.08
Q	2.54	3.42

TO-220 Part Marking Information

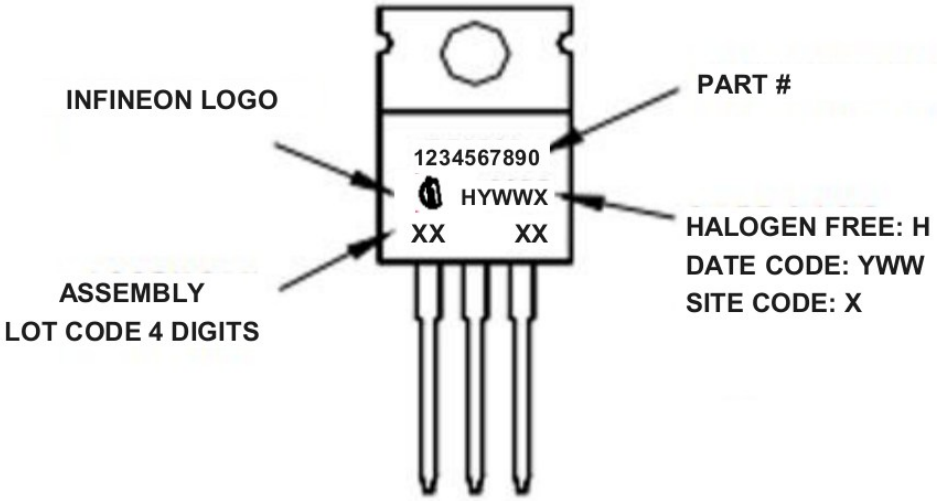

TO-220 packages are not recommended for Surface Mount Application.

Revision History

Date	Rev.	Comments
2026-08-19	2.1	• Update datasheet to Infineon format • Updated Package Outline and Part marking –page 8 • Added disclaimer on last page.

Trademarks

All referenced product or service names and trademarks are the property of their respective owners.

Published by Infineon Technologies AG, Am Campeon 1-15, 85579 Neubiberg, Germany
Copyright (c) 2026 Infineon Technologies AG and its affiliates. All Rights Reserved.

Important notice

The product is not developed and released for series supply by Infineon.

Subject to the development and release of the product for series supply by Infineon, the technical specifications of the product are set forth in the relevant final product data sheet provided by Infineon.

Infineon reserves the right to change all information given in this document at any time without notice.

Products which may also include samples and may be comprised of hardware or software or both ("Product(s)") are sold or provided and delivered by Infineon Technologies AG and its affiliates ("Infineon") subject to the terms and conditions of the frame supply contract or other written agreement(s) executed by a customer and Infineon or, in the absence of the foregoing, the applicable Sales Conditions of Infineon. General terms and conditions of a customer or deviations from applicable Sales Conditions of Infineon shall only be binding for Infineon if and to the extent Infineon has given its express written consent.

For the avoidance of doubt, Infineon disclaims all warranties of non-infringement of third-party rights and implied warranties such as warranties of fitness for a specific use/purpose or merchantability.

Infineon shall not be responsible for any information with respect to samples, the application or customer's specific use of any Product or for any examples or typical values given in this document.

The data contained in this document is exclusively intended for technically qualified and skilled customer representatives. It is the responsibility of the customer to evaluate the suitability of the Product for the intended application and the customer's specific use and to verify all relevant technical data contained in this document in the intended application and the customer's specific use. The customer is responsible for properly designing, programming, and testing the functionality and safety of the intended application, as well as complying with any legal requirements related to its use.

Unless otherwise explicitly approved by Infineon, Products may not be used in any application where a failure of the Products or any consequences of the use thereof can reasonably be expected to result in personal injury. However, the foregoing shall not

prevent the customer from using any Product in such fields of use that Infineon has explicitly designed and sold it for, provided that the overall responsibility for the application lies with the customer.

Infineon expressly reserves the right to use its content for commercial text and data mining (TDM) according to applicable laws, e.g. Section 44b of the German Copyright Act (UrhG).

If the Product includes security features: Because no computing device can be absolutely secure, and despite security measures implemented in the Product, Infineon does not guarantee that the Product will be free from intrusion, data theft or loss, or other breaches ("Security Breaches"), and Infineon shall have no liability arising out of any Security Breaches.

If this document includes or references software:

The software is owned by Infineon under the intellectual property laws and treaties of the United States, Germany, and other countries worldwide. All rights reserved. Therefore, you may use the software only as provided in the software license agreement accompanying the software. If no software license agreement applies, Infineon hereby grants you a personal, non-exclusive, non-transferable license (without the right to sublicense) under its intellectual property rights in the software (a) for software provided in source code form, to modify and reproduce the software solely for use with Infineon hardware products, only internally within your organization, and (b) to distribute the software in binary code form externally to end users, solely for use on Infineon hardware products. Any other use, reproduction, modification, translation, or compilation of the software is prohibited.

For further information on the Product, technology, delivery terms and conditions, and prices, please contact your nearest Infineon office or visit https://www.infineon.com.