Final datasheet

EconoPACK™3 module with TRENCHSTOP™IGBT7 and emitter controlled 7 diode and NTC

Features


Typical appearance

- Electrical features
  - V_{CES} = 1200 V
  - $I_{C\ nom}$ = 35 A / I_{CRM} = 70 A
  - TRENCHSTOP™ IGBT7
  - Integrated temperature sensor
  - Suitable Infineon gate drivers can be found under https://www.infineon.com/gdfinder
- Mechanical features
  - Copper base plate

Potential applications

- Motor drives
- Elevators
- Servo drives

Product validation

- Qualified for industrial applications according to the relevant tests of IEC 60747, 60749 and 60068

Description

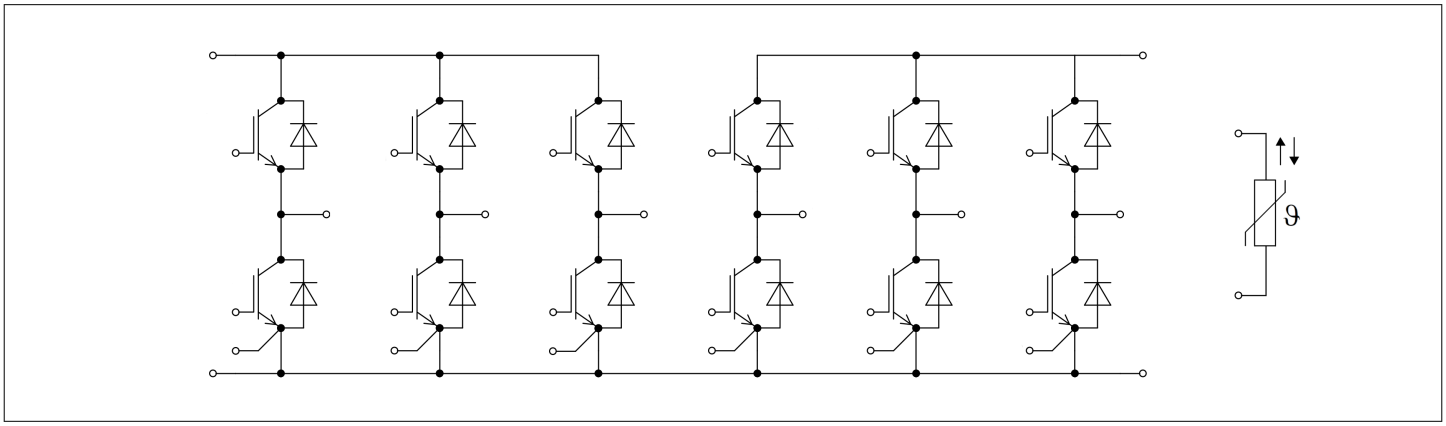

Table of contents

Description . . . 1
Features . . . 1
Potential applications . . . 1
Product validation . . . 1
Table of contents . . . 2
1 Package . . . 3
2 IGBT, Inverter . . . 3
3 Diode, Inverter . . . 5
4 NTC-Thermistor . . . 6
5 Characteristics diagrams . . . 7
6 Circuit diagram . . . 12
7 Package outlines . . . 13
8 Module label code . . . 14
Revision history . . . 15
Disclaimer . . . 16

1 Package

Table 1 Insulation coordination

Parameter	Symbol	Note or test condition	Values	Unit
Isolation test voltage	V_{ISOL}	RMS, f = 50 Hz, *t* = 60 s	2.5	kV
Isolation test voltage NTC	$V_{ISOL(NTC)}$	RMS, f = 50 Hz, *t* = 60 s	2.5	kV
Material of module baseplate			Cu	
Internal isolation		basic insulation (class 1, IEC 61140)	Al_2O_3	
Creepage distance	$d_{Creep\ nom}$	terminal to baseplate, nom.	10.0	mm
Clearance	$d_{Clear\ nom}$	terminal to baseplate, nom.	7.5	mm
Comparative tracking index	*CTI*		> 200	
Relative thermal index (electrical)	*RTI*	housing	140	°C

Table 2 Characteristic values

Parameter	Symbol	Note or test condition		Values			Unit
				Min.	Typ.	Max.	
Stray inductance module	L_{sCE}				20		nH
Module lead resistance, terminals - chip	$R_{CC'+EE'}$	T_C = 25 °C, per switch			2.1		mΩ
Storage temperature	T_{stg}			-40		125	°C
Mounting torque for module mounting	*M*	- Mounting according to valid application note	M5, Screw	3		6	Nm
Weight	*G*				300		g

***Note**: The current under continuous operation is limited to 50 A rms per connector pin.*

2 IGBT, Inverter

Table 3 Maximum rated values

Parameter	Symbol	Note or test condition		Values	Unit
Collector-emitter voltage	V_{CES}		T_{vj} = 25 °C	1200	V
Continuous DC collector current	I_{CDC}	$T_{vj\ max}$ = 175 °C	T_C = 115 °C	35	A
Repetitive peak collector current	I_{CRM}	t_p limited by $T_{vj\ op}$		70	A
Gate-emitter peak voltage	V_{GES}			±20	V

Table 4 Characteristic values

Parameter	Symbol	Note or test condition		Values			Unit
				Min.	Typ.	Max.	
Collector-emitter saturation voltage	$V_{CE\,sat}$	I_C = 35 A, V_{GE} = 15 V	T_{vj} = 25 °C		1.60	1.85	V
			T_{vj} = 125 °C		1.74		
			T_{vj} = 175 °C		1.82		
Gate threshold voltage	V_{GEth}	I_C = 0.75 mA, V_{CE} = V_{GE}, T_{vj} = 25 °C		5.15	5.80	6.45	V
Gate charge	Q_G	V_{GE} = ±15 V, V_{CC} = 600 V			0.548		µC
Internal gate resistor	R_{Gint}	T_{vj} = 25 °C			0		Ω
Input capacitance	C_{ies}	f = 100 kHz, T_{vj} = 25 °C, V_{CE} = 25 V, V_{GE} = 0 V			6.62		nF
Reverse transfer capacitance	C_{res}	f = 100 kHz, T_{vj} = 25 °C, V_{CE} = 25 V, V_{GE} = 0 V			0.023		nF
Collector-emitter cut-off current	I_{CES}	V_{CE} = 1200 V, V_{GE} = 0 V	T_{vj} = 25 °C			13	µA
Gate-emitter leakage current	I_{GES}	V_{CE} = 0 V, V_{GE} = 20 V, T_{vj} = 25 °C				100	nA
Turn-on delay time (inductive load)	t_{don}	I_C = 35 A, V_{CC} = 600 V, V_{GE} = ±15 V, R_{Gon} = 2.7 Ω	T_{vj} = 25 °C		0.023		µs
			T_{vj} = 125 °C		0.027		
			T_{vj} = 175 °C		0.030		
Rise time (inductive load)	t_r	I_C = 35 A, V_{CC} = 600 V, V_{GE} = ±15 V, R_{Gon} = 2.7 Ω	T_{vj} = 25 °C		0.010		µs
			T_{vj} = 125 °C		0.012		
			T_{vj} = 175 °C		0.013		
Turn-off delay time (inductive load)	t_{doff}	I_C = 35 A, V_{CC} = 600 V, V_{GE} = ±15 V, R_{Goff} = 2.7 Ω	T_{vj} = 25 °C		0.223		µs
			T_{vj} = 125 °C		0.296		
			T_{vj} = 175 °C		0.323		
Fall time (inductive load)	t_f	I_C = 35 A, V_{CC} = 600 V, V_{GE} = ±15 V, R_{Goff} = 2.7 Ω	T_{vj} = 25 °C		0.132		µs
			T_{vj} = 125 °C		0.232		
			T_{vj} = 175 °C		0.296		
Turn-on energy loss per pulse	E_{on}	I_C = 35 A, V_{CC} = 600 V, L_σ = 35 nH, V_{GE} = ±15 V, R_{Gon} = 2.7 Ω, di/dt = 3470 A/µs (T_{vj} = 175 °C)	T_{vj} = 25 °C		0.99		mJ
			T_{vj} = 125 °C		1.52		
			T_{vj} = 175 °C		1.93		
Turn-off energy loss per pulse	E_{off}	I_C = 35 A, V_{CC} = 600 V, L_σ = 35 nH, V_{GE} = ±15 V, R_{Goff} = 2.7 Ω, dv/dt = 3200 V/µs (T_{vj} = 175 °C)	T_{vj} = 25 °C		2.16		mJ
			T_{vj} = 125 °C		3.51		
			T_{vj} = 175 °C		4.24		
Thermal resistance, junction to case	R_{thJC}	per IGBT				0.815	K/W

(table continues...)

Table 4 (continued) Characteristic values

Parameter	Symbol	Note or test condition	Values			Unit
			Min.	Typ.	Max.	
Thermal resistance, case to heat sink	R_{thCH}	per IGBT, λ_{grease} = 1 W/(m·K)		0.0960		K/W
Temperature under switching conditions	$T_{vj\,op}$		-40		175	°C

Note: *$T_{vj\,op}$ > 150°C is allowed for operation at overload conditions. For detailed specifications, please refer to AN 2018-14.*

3 Diode, Inverter

Table 5 Maximum rated values

Parameter	Symbol	Note or test condition		Values	Unit
Repetitive peak reverse voltage	V_{RRM}		T_{vj} = 25 °C	1200	V
Continuous DC forward current	I_F			35	A
Repetitive peak forward current	I_{FRM}	t_P = 1 ms		70	A
I^2t - value	I^2t	t_P = 10 ms, V_R = 0 V	T_{vj} = 125 °C	205	A^2s
			T_{vj} = 175 °C	180	

Table 6 Characteristic values

Parameter	Symbol	Note or test condition		Values			Unit
				Min.	Typ.	Max.	
Forward voltage	V_F	I_F = 35 A, V_{GE} = 0 V	T_{vj} = 25 °C		1.72	2.10	V
			T_{vj} = 125 °C		1.59		
			T_{vj} = 175 °C		1.52		
Peak reverse recovery current	I_{RM}	V_{CC} = 600 V, I_F = 35 A, V_{GE} = -15 V, -di$_F$/dt = 3470 A/µs (T_{vj} = 175 °C)	T_{vj} = 25 °C		78.3		A
			T_{vj} = 125 °C		93.6		
			T_{vj} = 175 °C		103		
Recovered charge	Q_r	V_{CC} = 600 V, I_F = 35 A, V_{GE} = -15 V, -di$_F$/dt = 3470 A/µs (T_{vj} = 175 °C)	T_{vj} = 25 °C		2.87		µC
			T_{vj} = 125 °C		5.41		
			T_{vj} = 175 °C		7.13		
Reverse recovery energy	E_{rec}	V_{CC} = 600 V, I_F = 35 A, V_{GE} = -15 V, -di$_F$/dt = 3470 A/µs (T_{vj} = 175 °C)	T_{vj} = 25 °C		1.17		mJ
			T_{vj} = 125 °C		2.32		
			T_{vj} = 175 °C		3.07		

(table continues...)

Table 6 (continued) Characteristic values

Parameter	Symbol	Note or test condition	Values			Unit
			Min.	Typ.	Max.	
Thermal resistance, junction to case	R_{thJC}	per diode			1.06	K/W
Thermal resistance, case to heat sink	R_{thCH}	per diode, λ_{grease} = 1 W/(m·K)		0.137		K/W
Temperature under switching conditions	$T_{vj\,op}$		-40		175	°C

***Note**: $T_{vj\,op}$ > 150°C is allowed for operation at overload conditions. For detailed specifications, please refer to AN 2018-14.*

4 NTC-Thermistor

Table 7 Characteristic values

Parameter	Symbol	Note or test condition	Values			Unit
			Min.	Typ.	Max.	
Rated resistance	R_{25}	T_{NTC} = 25 °C		5		kΩ
Deviation of R_{100}	$\Delta R/R$	T_{NTC} = 100 °C, R_{100} = 493 Ω	-5		5	%
Power dissipation	P_{25}	T_{NTC} = 25 °C			20	mW
B-value	$B_{25/50}$	$R_2 = R_{25} \exp[B_{25/50}(1/T_2-1/(298{,}15\ K))]$		3375		K
B-value	$B_{25/80}$	$R_2 = R_{25} \exp[B_{25/80}(1/T_2-1/(298{,}15\ K))]$		3411		K
B-value	$B_{25/100}$	$R_2 = R_{25} \exp[B_{25/100}(1/T_2-1/(298{,}15\ K))]$		3433		K

***Note**: For an analytical description of the NTC characteristics please refer to AN2009-10, chapter 4.*

5 Characteristics diagrams

Output characteristic (typical), IGBT, Inverter

$I_C = f(V_{CE})$

$V_{GE} = 15$ V

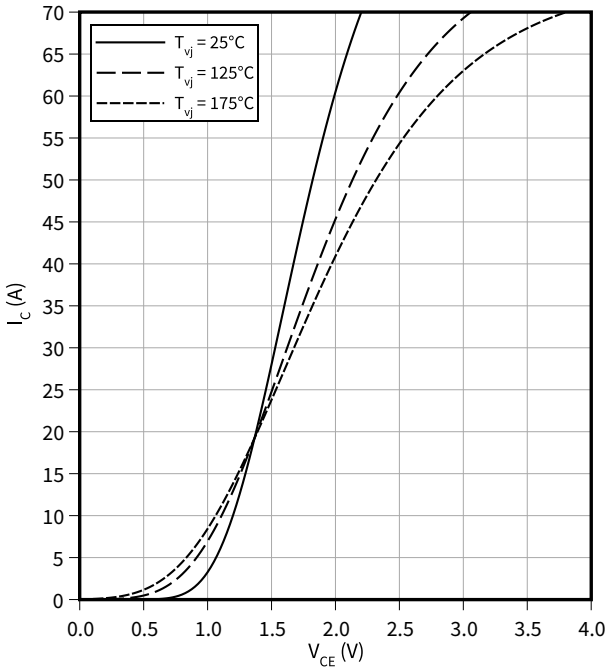

Output characteristic field (typical), IGBT, Inverter

$I_C = f(V_{CE})$

$T_{vj} = 175$ °C

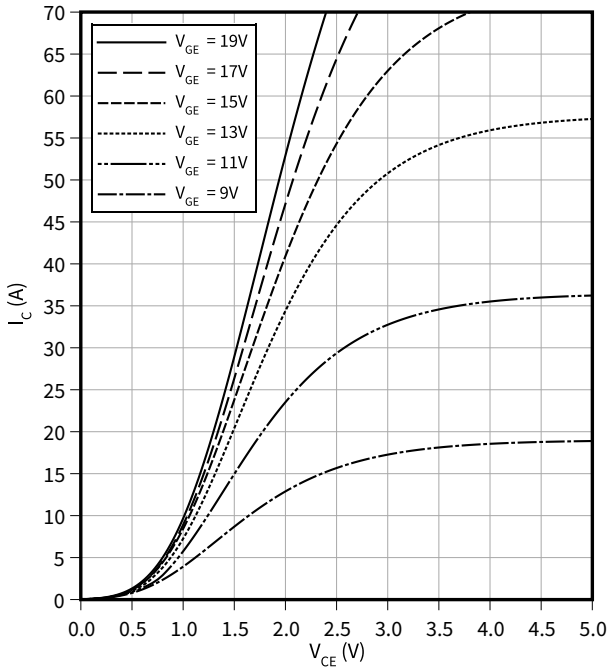

Transfer characteristic (typical), IGBT, Inverter

$I_C = f(V_{GE})$

$V_{CE} = 20$ V

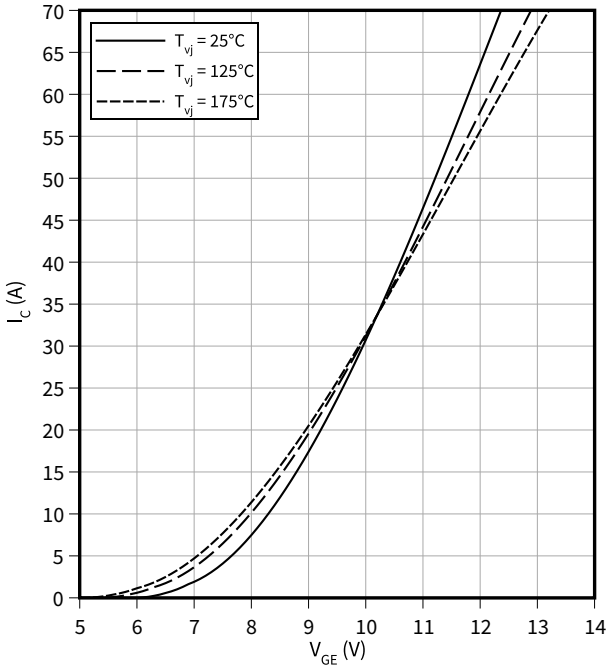

Gate charge characteristic (typical), IGBT, Inverter

$V_{GE} = f(Q_G)$

$I_C = 35$ A, $T_{vj} = 25$ °C

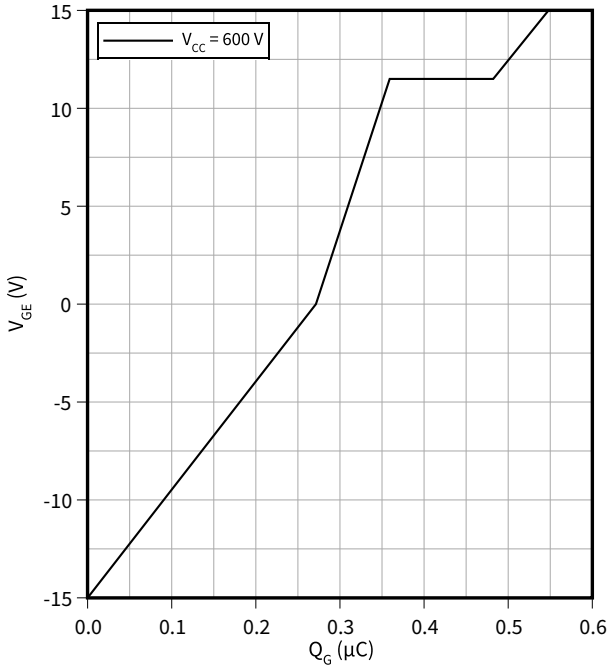

Capacity characteristic (typical), IGBT, Inverter

$C = f(V_{CE})$

$f = 100\ kHz$, $V_{GE} = 0\ V$, $T_{vj} = 25\ °C$

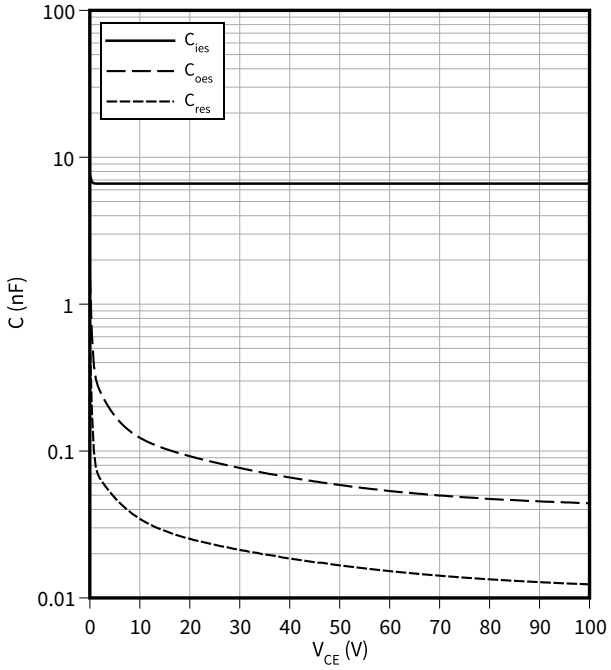

Switching times (typical), IGBT, Inverter

$t = f(I_C)$

$R_{Goff} = 2.7\ \Omega$, $R_{Gon} = 2.7\ \Omega$, $V_{CC} = 600\ V$, $V_{GE} = \pm 15\ V$, $T_{vj} = 175\ °C$

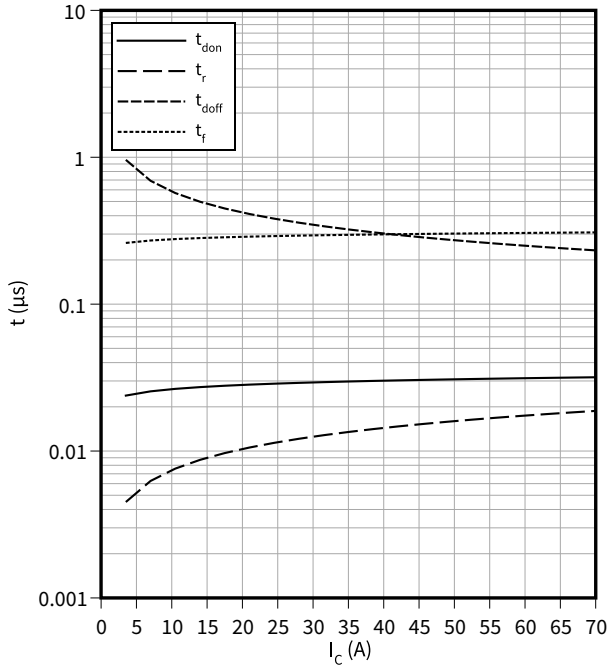

Switching times (typical), IGBT, Inverter

$t = f(R_G)$

$I_C = 35\ A$, $V_{CC} = 600\ V$, $V_{GE} = \pm 15\ V$, $T_{vj} = 175\ °C$

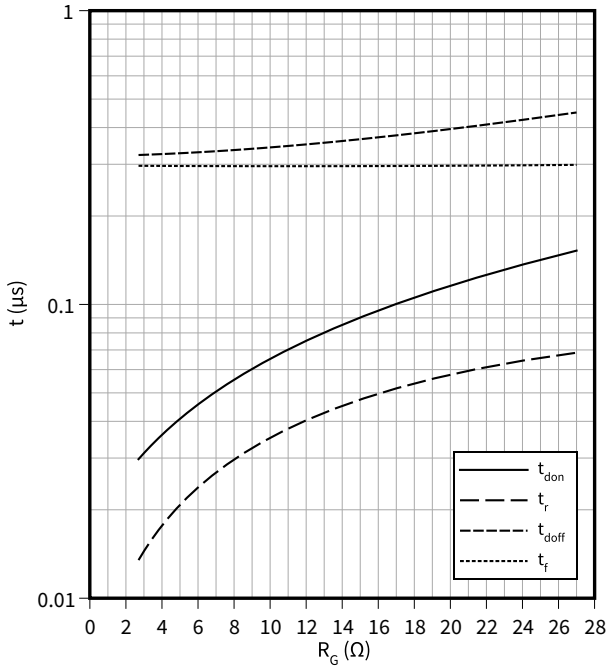

Voltage slope (typical), IGBT, Inverter

$dv/dt = f(R_G)$

$I_C = 35\ A$, $V_{CE} = 600\ V$, $V_{GE} = \pm 15\ V$, $T_{vj} = 25\ °C$

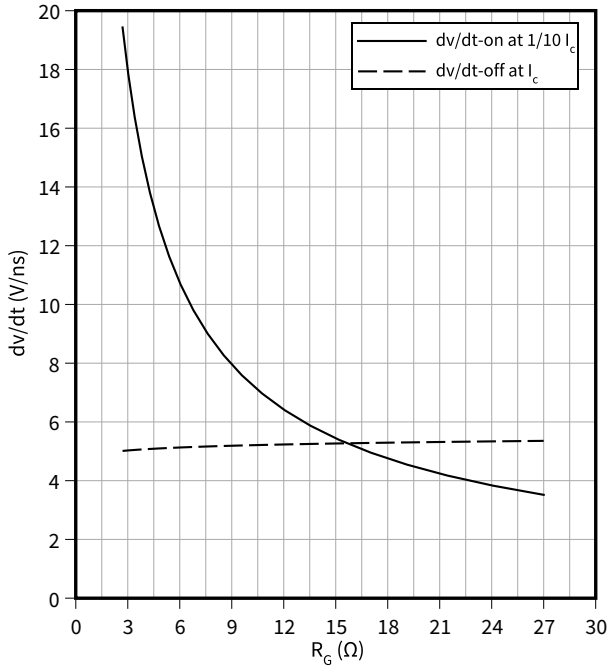

Switching losses (typical), IGBT, Inverter

$E = f(I_C)$

$R_{Goff} = 2.7\ \Omega$, $R_{Gon} = 2.7\ \Omega$, $V_{CC} = 600\ V$, $V_{GE} = \pm 15\ V$

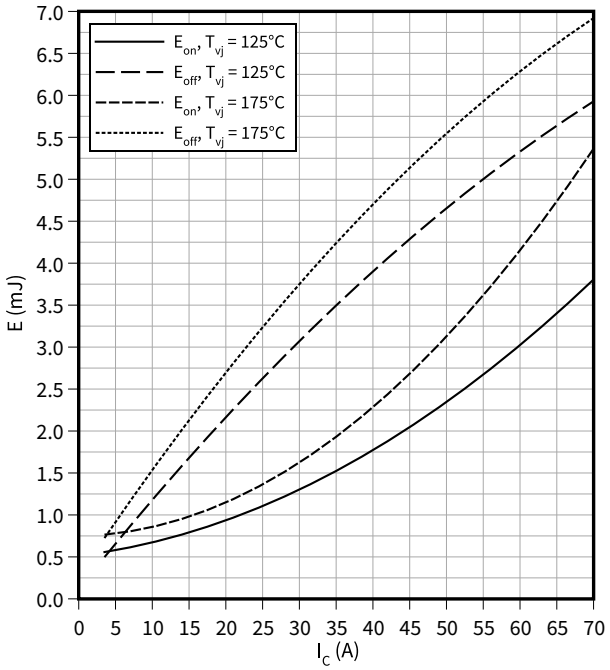

Switching losses (typical), IGBT, Inverter

$E = f(R_G)$

$I_C = 35\ A$, $V_{CC} = 600\ V$, $V_{GE} = \pm 15\ V$

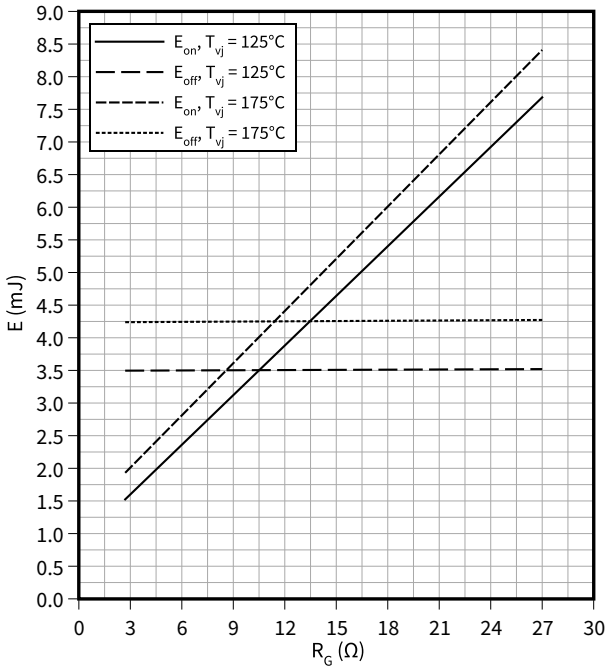

Reverse bias safe operating area (RBSOA), IGBT, Inverter

$I_C = f(V_{CE})$

$R_{Goff} = 2.7\ \Omega$, $V_{GE} = \pm 15\ V$, $T_{vj} = 175\ °C$

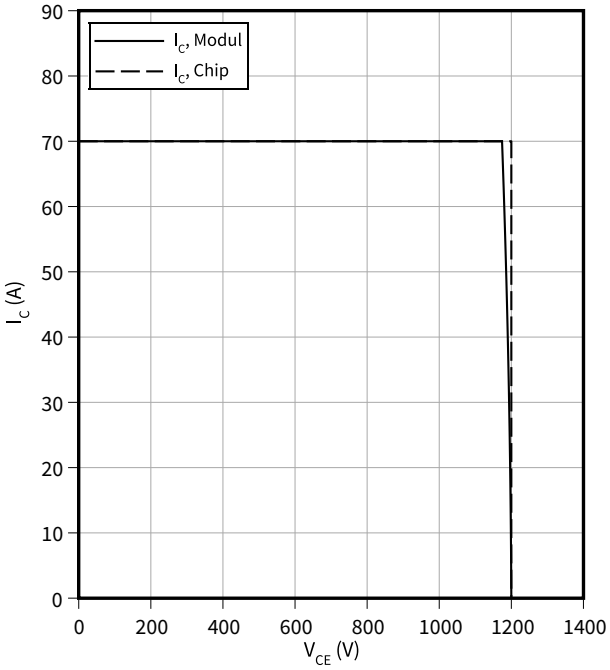

Transient thermal impedance, IGBT, Inverter

$Z_{th} = f(t)$

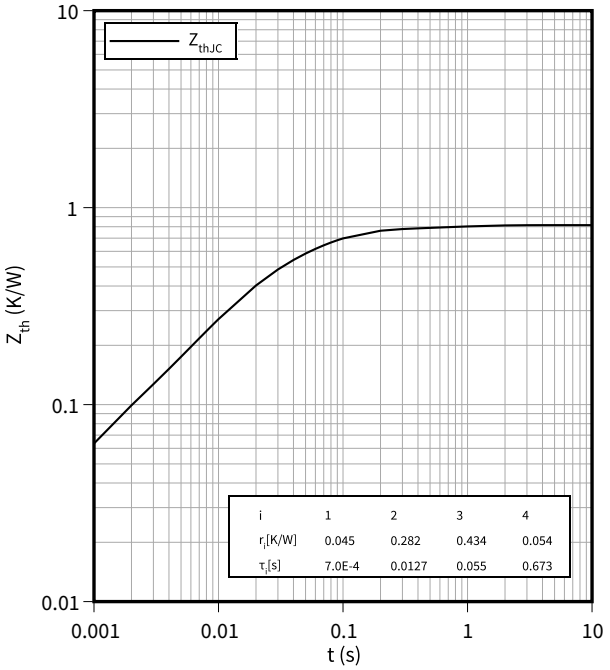

Forward characteristic (typical), Diode, Inverter

$I_F = f(V_F)$

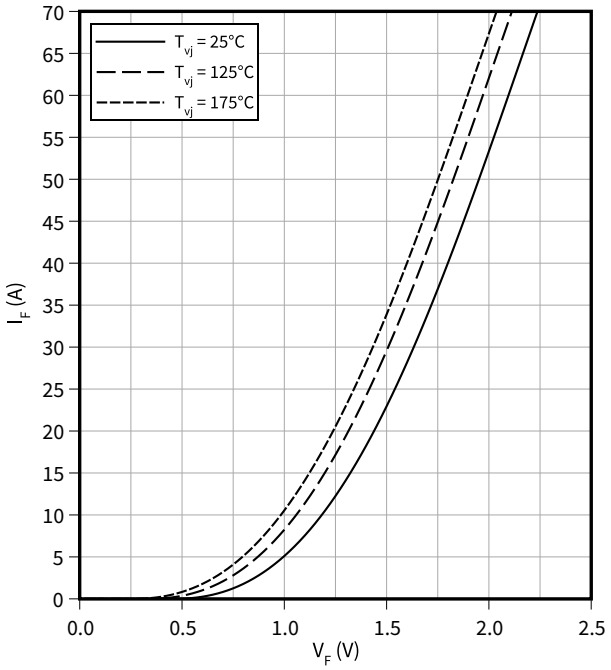

Switching losses (typical), Diode, Inverter

$E_{rec} = f(I_F)$

$R_{Gon} = 2.7\ \Omega$, $V_{CE} = 600\ V$

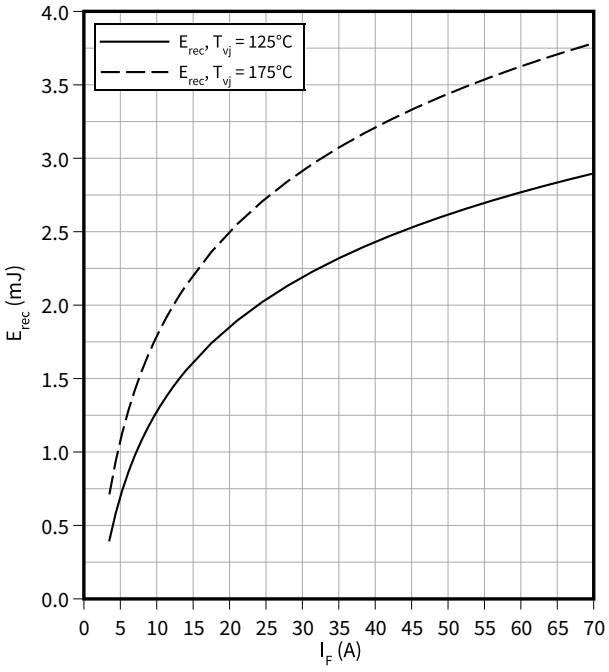

Switching losses (typical), Diode, Inverter

$E_{rec} = f(R_G)$

$V_{CE} = 600\ V$, $I_F = 35\ A$

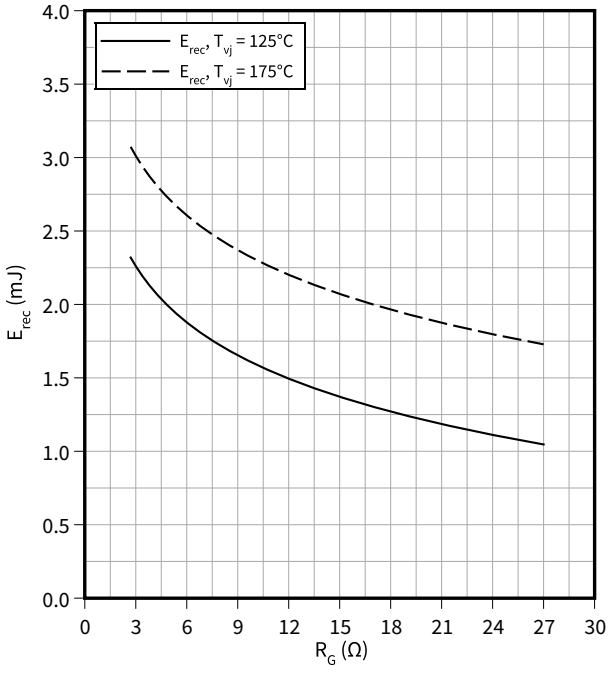

Transient thermal impedance, Diode, Inverter

$Z_{th} = f(t)$

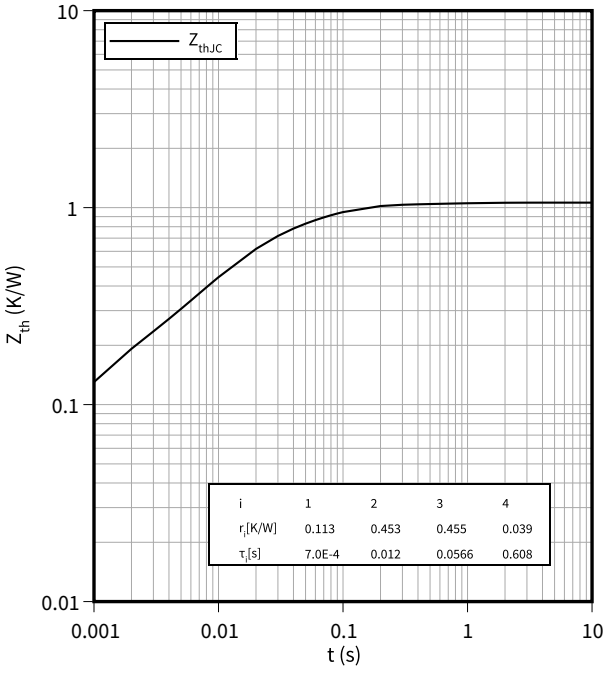

Temperature characteristic (typical), NTC-Thermistor

$R = f(T_{NTC})$

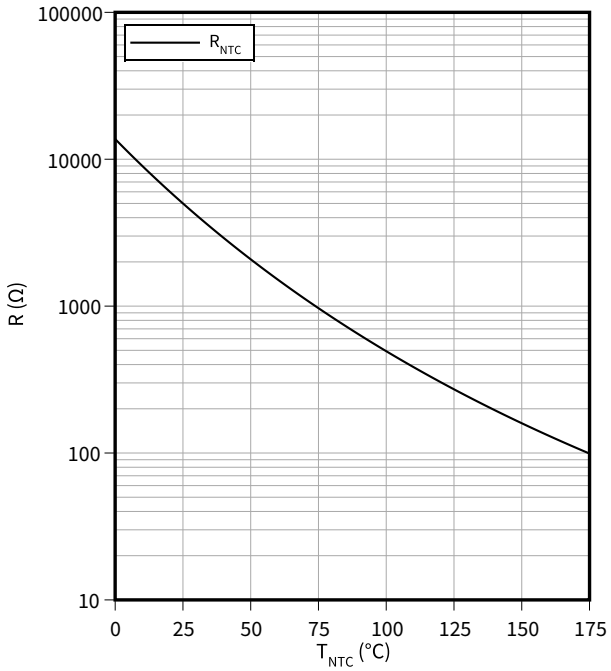

6 Circuit diagram

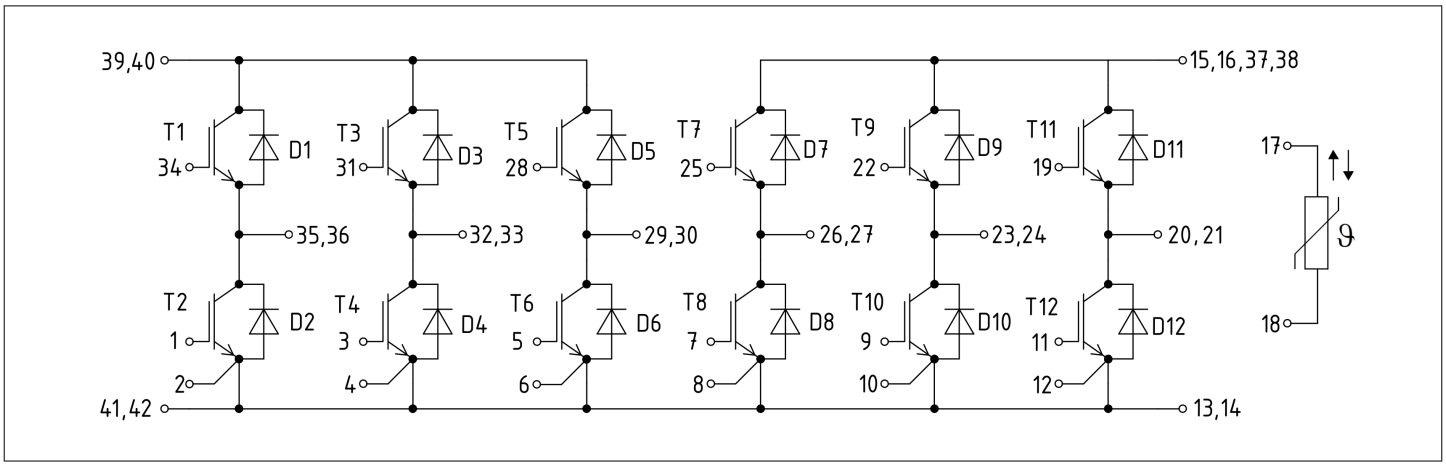

Figure 1

7 Package outlines

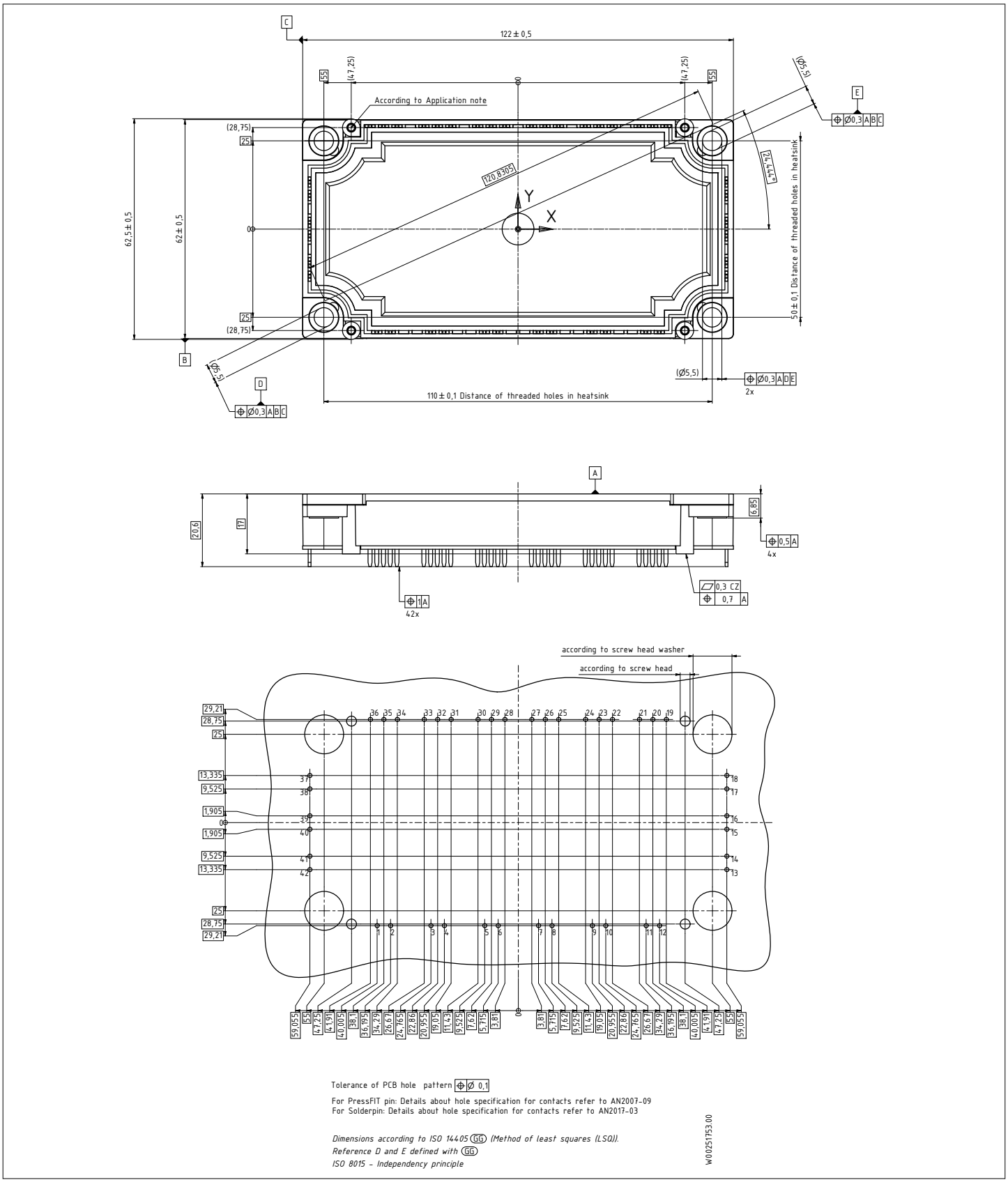

Figure 2

8 Module label code

Module label code			
Code format	Data Matrix		Barcode Code128
Encoding	ASCII text		Code Set A
Symbol size	16x16		23 digits
Standard	IEC24720 and IEC16022		IEC8859-1
Code content	*Content* Module serial number Module material number Production order number Date code (production year) Date code (production week)	*Digit* 1 – 5 6 - 11 12 - 19 20 – 21 22 – 23	*Example* 71549 142846 55054991 15 30
Example	71549142846550549911530		71549142846550549911530

Figure 3

Revision history

Document revision	Date of release	Description of changes
0.10	2023-06-15	Initial version
1.00	2024-04-02	Final datasheet

Trademarks

All referenced product or service names and trademarks are the property of their respective owners.

Edition 2024-04-02

Published by

Infineon Technologies AG

81726 Munich, Germany

© 2024 Infineon Technologies AG

All Rights Reserved.

Do you have a question about any aspect of this document?

Email: erratum@infineon.com

Document reference
IFX-ABF170-002

Important notice

The information given in this document shall in no event be regarded as a guarantee of conditions or characteristics ("Beschaffenheitsgarantie").

With respect to any examples, hints or any typical values stated herein and/or any information regarding the application of the product, Infineon Technologies hereby disclaims any and all warranties and liabilities of any kind, including without limitation warranties of non-infringement of intellectual property rights of any third party.

In addition, any information given in this document is subject to customer's compliance with its obligations stated in this document and any applicable legal requirements, norms and standards concerning customer's products and any use of the product of Infineon Technologies in customer's applications.

The data contained in this document is exclusively intended for technically trained staff. It is the responsibility of customer's technical departments to evaluate the suitability of the product for the intended application and the completeness of the product information given in this document with respect to such application.

Warnings

Due to technical requirements products may contain dangerous substances. For information on the types in question please contact your nearest Infineon Technologies office.

Except as otherwise explicitly approved by Infineon Technologies in a written document signed by authorized representatives of Infineon Technologies, Infineon Technologies' products may not be used in any applications where a failure of the product or any consequences of the use thereof can reasonably be expected to result in personal injury.