TVS Diode

Transient Voltage Suppressor Diodes

ESD207-B1-02 Series

Ultra Low Clamping Bi-directional ESD / Transient / Surge Protection Diodes

ESD207-B1-02ELS
ESD207-B1-02EL

Data Sheet

Revision 1.3, 2013-12-19
Final

Power Management & Multimarket

Revision History: Revision 1.2, 2013-11-15	
Page or Item	**Subjects (major changes since previous revision)**
Revision 1.3, 2013-12-19	
5	Table 2-2) updated

Trademarks of Infineon Technologies AG

AURIX™, BlueMoon™, C166™, CanPAK™, CIPOS™, CIPURSE™, COMNEON™, EconoPACK™, CoolMOS™, CoolSET™, CORECONTROL™, CROSSAVE™, DAVE™, EasyPIM™, EconoBRIDGE™, EconoDUAL™, EconoPIM™, EiceDRIVER™, eupec™, FCOS™, HITFET™, HybridPACK™, I²RF™, ISOFACE™, IsoPACK™, MIPAQ™, ModSTACK™, my-d™, NovalithIC™, OmniTune™, OptiMOS™, ORIGA™, PRIMARION™, PrimePACK™, PrimeSTACK™, PRO-SIL™, PROFET™, RASIC™, ReverSave™, SatRIC™, SIEGET™, SINDRION™, SIPMOS™, SMARTi™, SmartLEWIS™, SOLID FLASH™, TEMPFET™, thinQ!™, TRENCHSTOP™, TriCore™, X-GOLD™, X-PMU™, XMM™, XPOSYS™.

Other Trademarks

Advance Design System™ (ADS) of Agilent Technologies, AMBA™, ARM™, MULTI-ICE™, KEIL™, PRIMECELL™, REALVIEW™, THUMB™, µVision™ of ARM Limited, UK. AUTOSAR™ is licensed by AUTOSAR development partnership. Bluetooth™ of Bluetooth SIG Inc. CAT-iq™ of DECT Forum. COLOSSUS™, FirstGPS™ of Trimble Navigation Ltd. EMV™ of EMVCo, LLC (Visa Holdings Inc.). EPCOS™ of Epcos AG. FLEXGO™ of Microsoft Corporation. FlexRay™ is licensed by FlexRay Consortium. HYPERTERMINAL™ of Hilgraeve Incorporated. IEC™ of Commission Electrotechnique Internationale. IrDA™ of Infrared Data Association Corporation. ISO™ of INTERNATIONAL ORGANIZATION FOR STANDARDIZATION. MATLAB™ of MathWorks, Inc. MAXIM™ of Maxim Integrated Products, Inc. MICROTEC™, NUCLEUS™ of Mentor Graphics Corporation. Mifare™ of NXP. MIPI™ of MIPI Alliance, Inc. MIPS™ of MIPS Technologies, Inc., USA. muRata™ of MURATA MANUFACTURING CO., MICROWAVE OFFICE™ (MWO) of Applied Wave Research Inc., OmniVision™ of OmniVision Technologies, Inc. Openwave™ Openwave Systems Inc. RED HAT™ Red Hat, Inc. RFMD™ RF Micro Devices, Inc. SIRIUS™ of Sirius Satellite Radio Inc. SOLARIS™ of Sun Microsystems, Inc. SPANSION™ of Spansion LLC Ltd. Symbian™ of Symbian Software Limited. TAIYO YUDEN™ of Taiyo Yuden Co. TEAKLITE™ of CEVA, Inc. TEKTRONIX™ of Tektronix Inc. TOKO™ of TOKO KABUSHIKI KAISHA TA. UNIX™ of X/Open Company Limited. VERILOG™, PALLADIUM™ of Cadence Design Systems, Inc. VLYNQ™ of Texas Instruments Incorporated. VXWORKS™, WIND RIVER™ of WIND RIVER SYSTEMS, INC. ZETEX™ of Diodes Zetex Limited.

Last Trademarks Update 2010-10-26

1 Ultra Low Clamping Bi-directional ESD / Transient / Surge Protection Diodes

1.1 Features

- ESD / transient / surge protection of one data / V_{bus} line exceding standard:
  - **IEC61000-4-2 (ESD): ±30 kV (air / contact discharge)**
  - **IEC61000-4-4 (EFT): ±50 A (5/50 ns)**
  - **IEC61000-4-5 (surge): ±8 A (8/20 µs)**
- Bi-directional, symmetrical working voltage up to V_{RWM} **= ±3.3 V**
- Medium capacitance: C_L **= 14 pF** (typ.)
- Ultra low clamping voltage V_{CL} **= 7 V** (typ.) @ I_{PP} = 16 A (TLP)
- Ultra low dynamic resistance R_{DYN} **= 0.13 Ω typ**.
- Pb-free (RoHS compliant) and halogen free package

1.2 Application Examples

- Audio Line, Speaker, Headset, Microphone Protection
- Human Interface Devices (Keyboard, Touchpad, Buttons)

1.3 Product Description

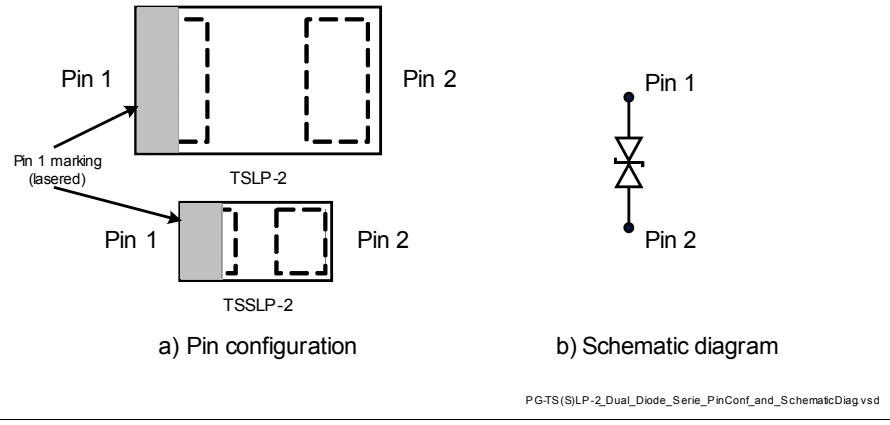

Figure 1-1 Pin Configuration and Schematic Diagram

Table 1-1 Ordering Information

Type	Package	Configuration	Marking code
ESD207-B1-02ELS	TSSLP-2-3	1 line, bi-directional	Y
ESD207-B1-02EL	TSLP-2-19	1 line, bi-directional	A

2 Characteristics

Table 2-1 Maximum Ratings at T_A = 25 °C, unless otherwise specified[1)]

Parameter	Symbol	Values			Unit
		Min.	Typ.	Max.	
ESD contact discharge[2)]	V_{ESD}	–	–	30	kV
Peak pulse current (t_p = 8/20 µs)[3)]	I_{PP}	–	–	8	A
Peak pulse power (t_p = 8/20 µs)[3)]	P_{PK}	–	–	65	W
Operating temperature range	T_{OP}	-40	–	125	°C
Storage temperature	T_{stg}	-65	–	150	°C

1) Device is electrically symmetrical
2) V_{ESD} according to IEC61000-4-2
3) I_{PP} according to IEC61000-4-5

Attention: Stresses above the max. values listed here may cause permanent damage to the device. Exposure to absolute maximum rating conditions for extended periods may affect device reliability. Maximum ratings are absolute ratings; exceeding only one of these values may cause irreversible damage to the integrated circuit.

2.1 Electrical Characteristics at T_A = 25 °C, unless otherwise specified

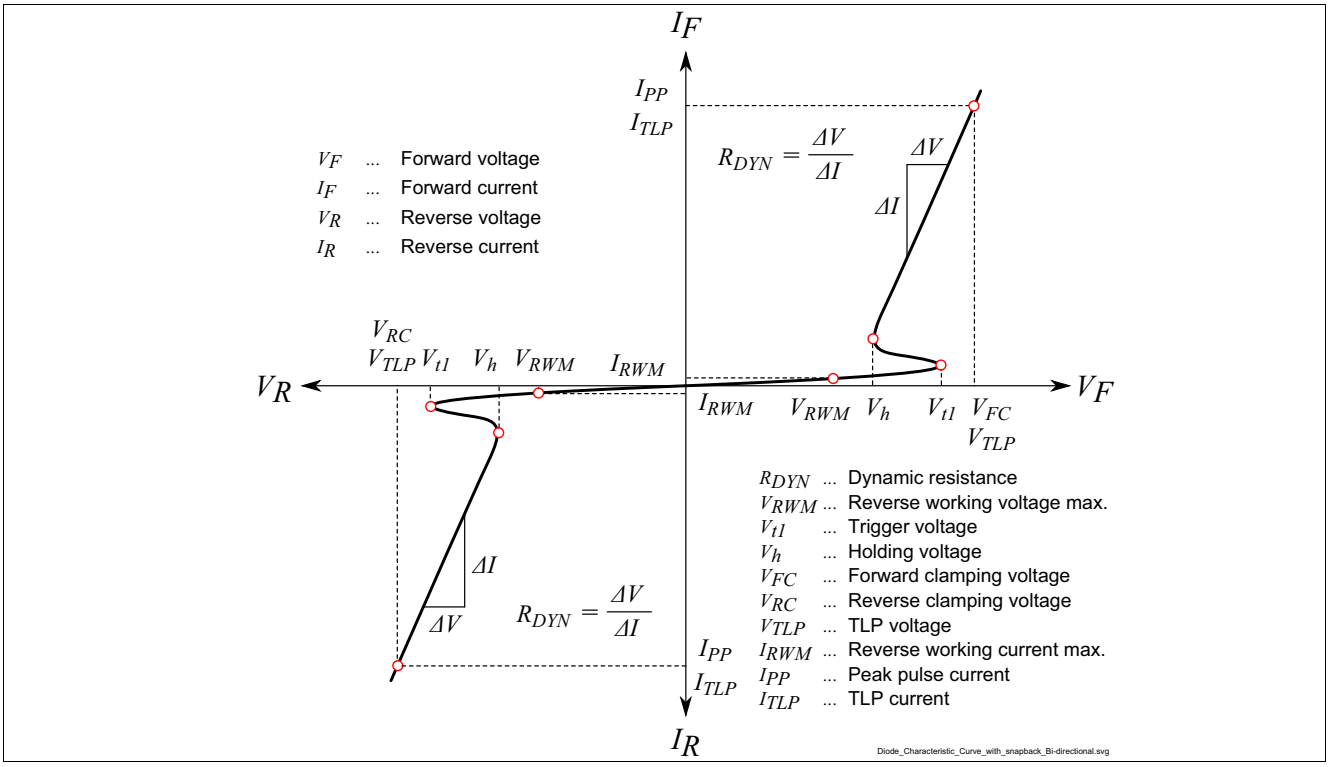

Figure 2-1 Definitions of electrical characteristics

Table 2-2 DC Characteristics at T_A = 25 °C, unless otherwise specified[1)]

Parameter	Symbol	Values			Unit	Note / Test Condition
		Min.	Typ.	Max.		
Reverse working voltage	V_{RWM}	–	–	3.3	V	
Reverse current	I_R	–	–	50	nA	V_R = 3.3 V
Trigger voltage	V_{t1}	3.65	–	–	V	
Holding voltage	V_h	3.65	4.4	–	V	I_R = 10 mA

1) Device is electrically symmetrical

Table 2-3 AC Characteristics at T_A = 25 °C, unless otherwise specified

Parameter	Symbol	Values			Unit	Note / Test Condition
		Min.	Typ.	Max.		
Line capacitance	C_L	–	14	20	pF	V_R = 0 V, f = 1 MHz

Table 2-4 ESD and Surge Characteristics at T_A = 25 °C, unless otherwise specified

Parameter	Symbol	Values			Unit	Note / Test Condition
		Min.	Typ.	Max.		
Clamping voltage[1)] Pin 1 to GND	V_{CL}	–	7	–	V	I_{TLP} = 16 A
		–	9	–		I_{TLP} = 30 A
Clamping voltage[1)] GND to Pin 1		–	7.5	–		I_{TLP} = 16 A
		–	9	–		I_{TLP} = 30 A
Clamping voltage[2)]		–	4.5	5.8		I_{PP} = 1 A
		–	6.8	8.1		I_{PP} = 8 A
Dynamic resistance[1)]	R_{DYN}	–	0.13	–	Ω	

1) ANSI/ESD STM5.5.1 - Electrostatic Discharge Sensitive Testing using Transmission Line Pulse (TLP) Model. TLP conditions: Z_0 = 50 Ω, t_p = 100 ns, t_r = 0.6 ns, I_{TLP} and V_{TLP} averaging window: t_1 = 30 ns to t_2 = 60 ns, extraction of dynamic resistance using least squares fit of TLP characteristic between I_{TLP1} = 5 A and I_{TLP2} = 40 A. Please refer to Application Note AN210 [1]

2) I_{PP} according to IEC61000-4-5 (t_p = 8/20 µs)

2.2 Typical Characteristics at T_A = 25 °C, unless otherwise specified

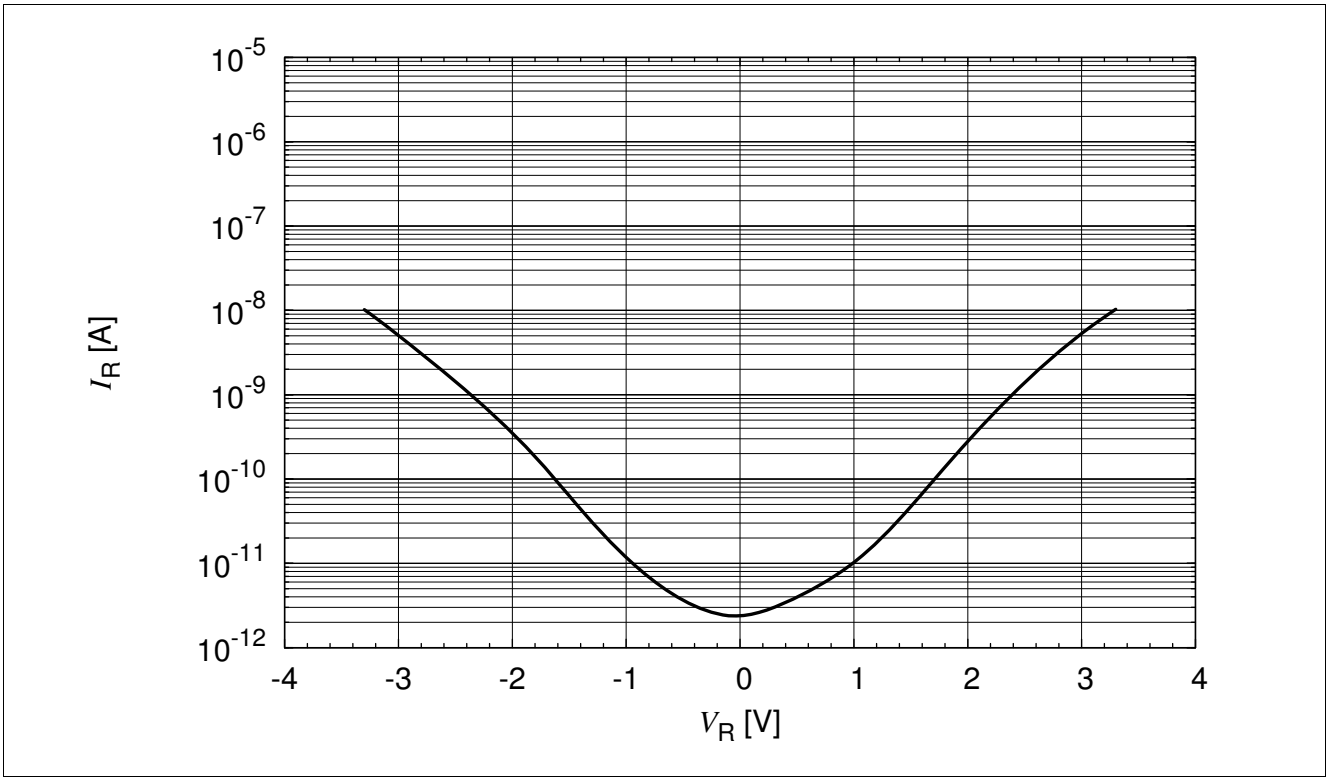

Figure 2-2 Reverse current: $I_R = f(V_R)$

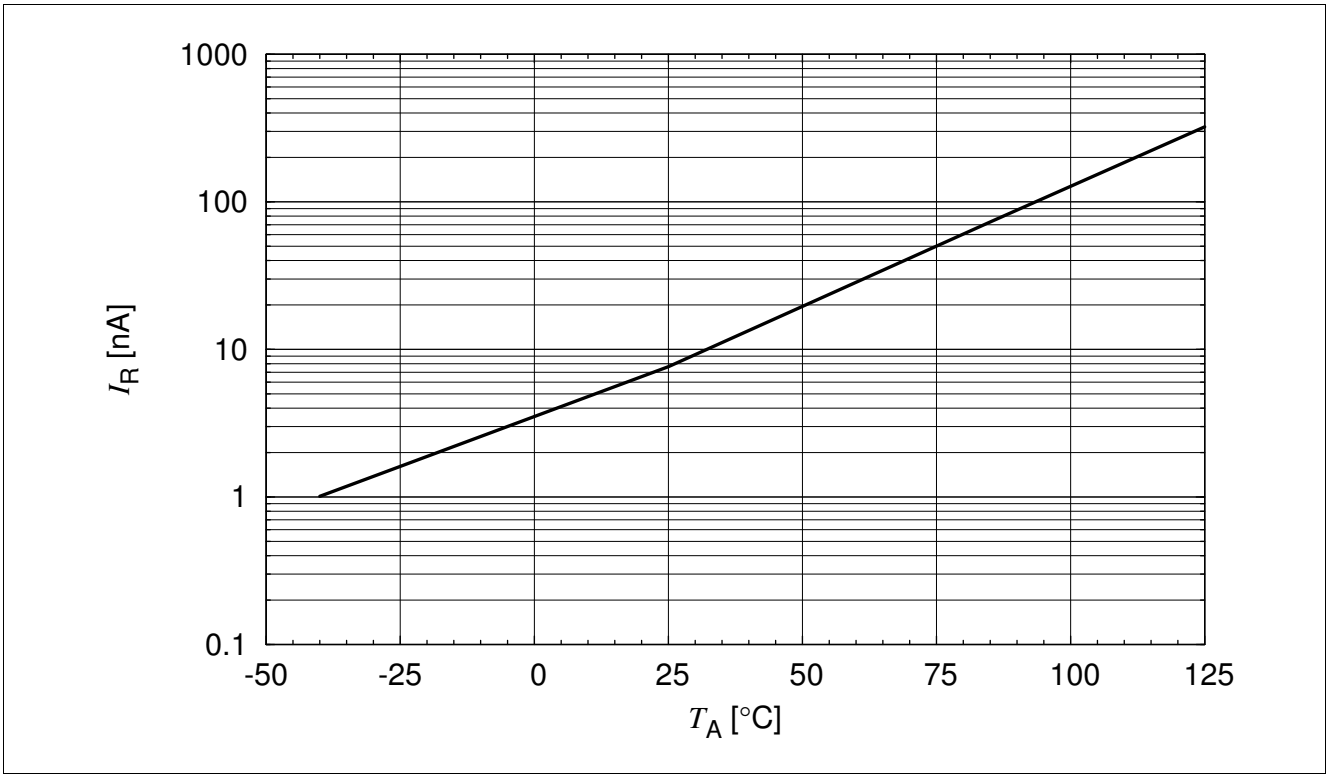

Figure 2-3 Reverse current: $I_R = f(T_A)$, V_R = 3.3 V

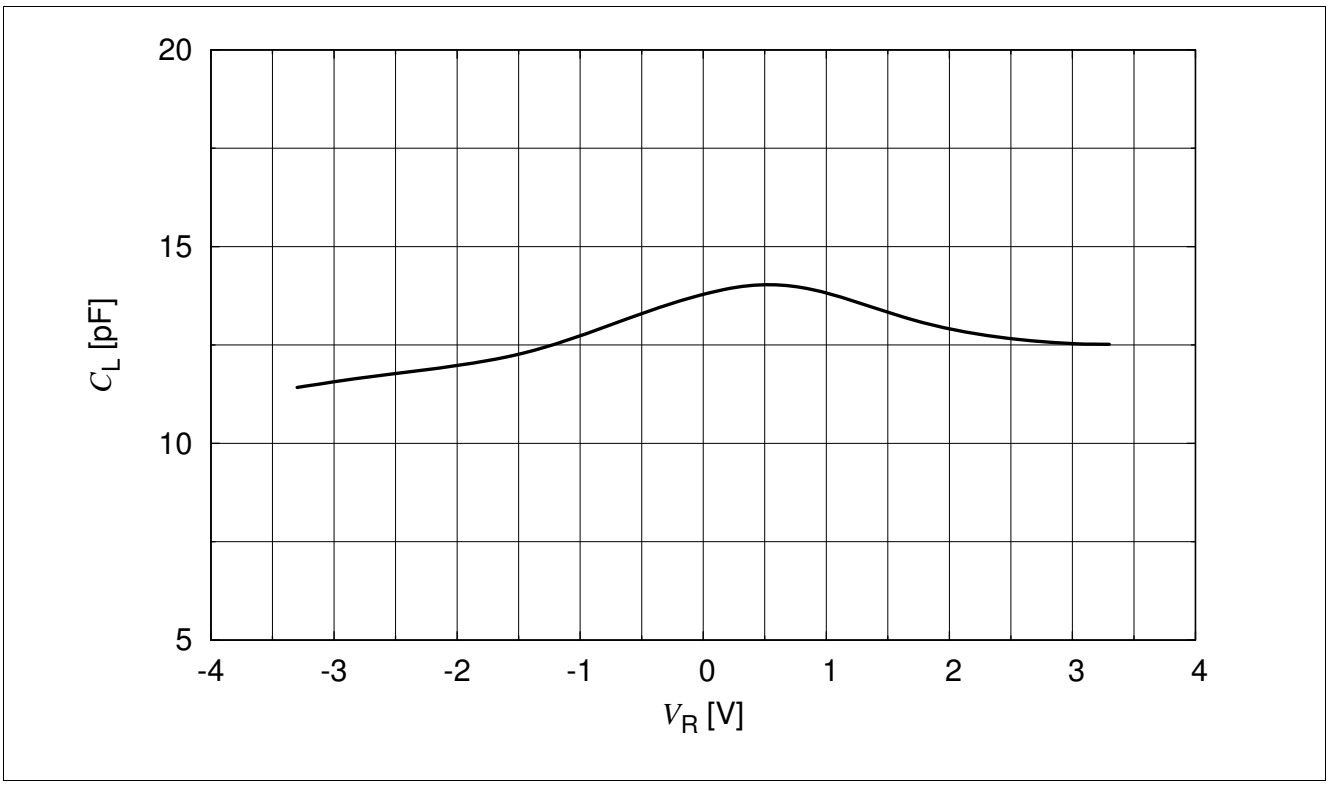

Figure 2-4 Line capacitance: $C_L = f(V_R)$, f = 1MHz

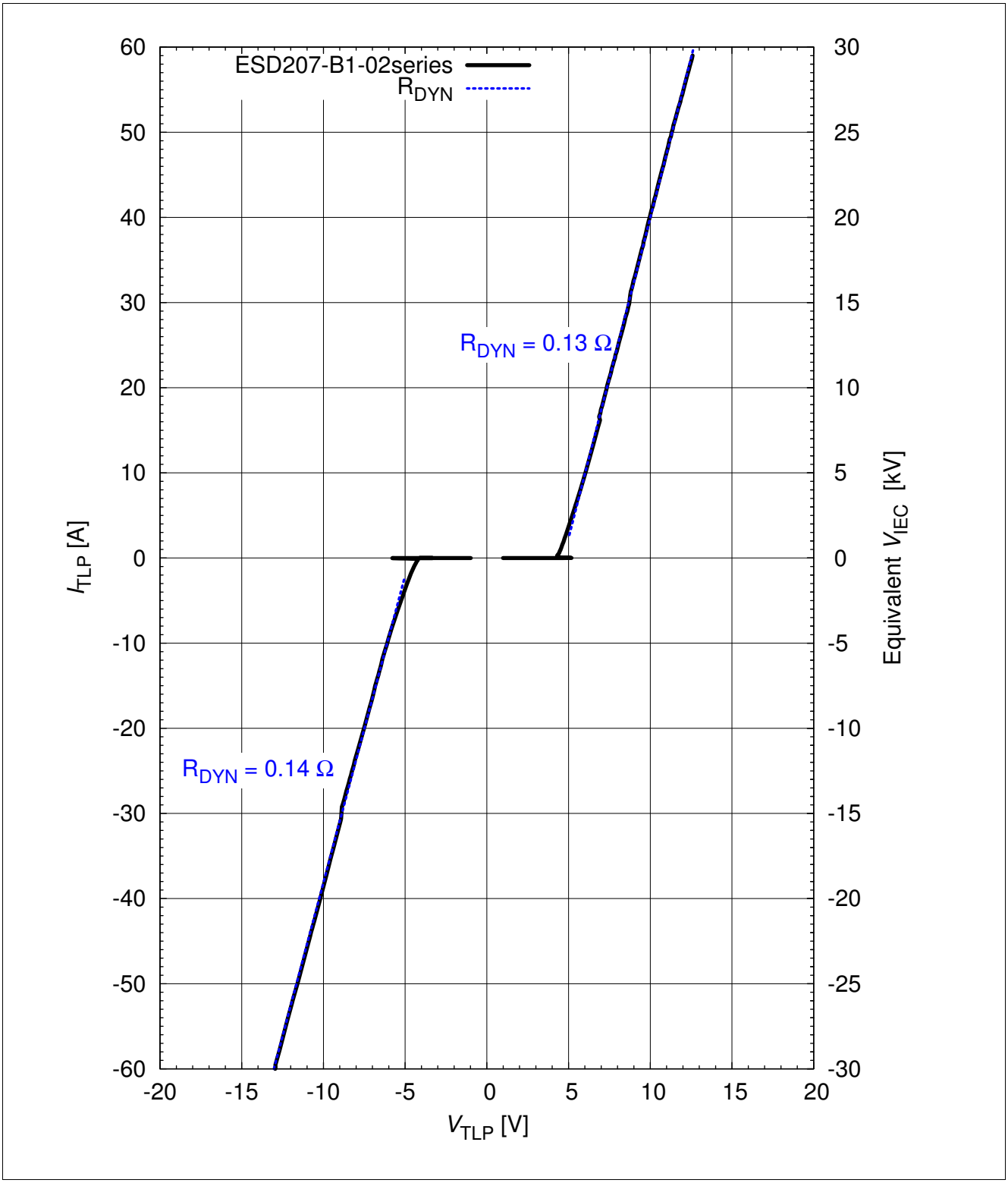

Figure 2-5 Clamping voltage (TLP): $I_{TLP} = f(V_{TLP})$ according ANSI/ESD STM5.5.1 - Electrostatic Discharge Sensitivity Testing using Transmission Line Pulse (TLP) Model. TLP conditions: Z_0 = 50 Ω, t_p = 100 ns, t_r = 0.6 ns, I_{TLP} and V_{TLP} averaging window: t_1 = ns to t_2 = 60 ns, extraction of dynamic resistance using squares fit to TLP characteristics between I_{TLP1} = 5 A and I_{TLP2} = 40 A. Please refer to Application Note AN210 [1]

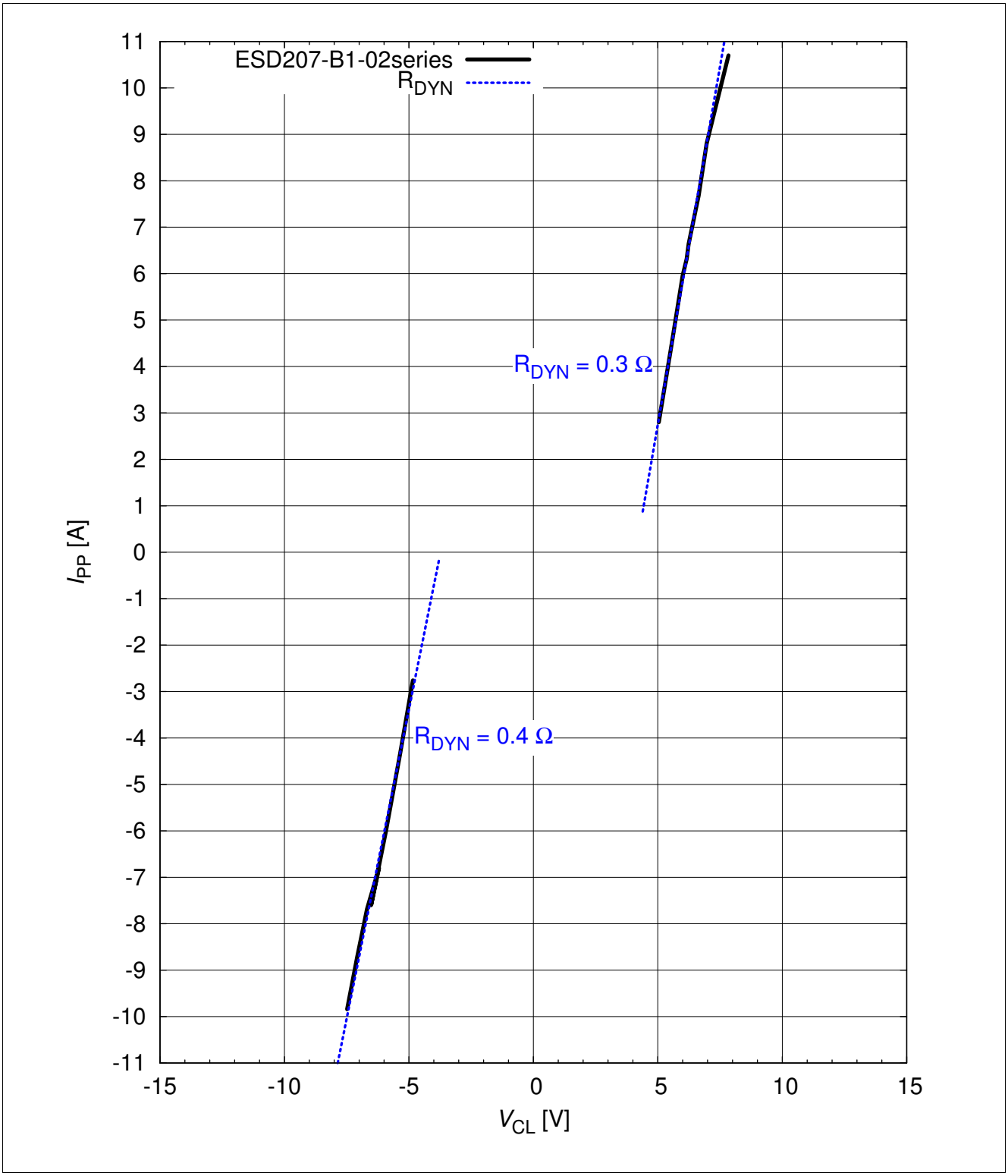

Figure 2-6 Pulse current (IEC61000-4-5) versus clamping voltage: $I_{PP} = f(V_{CL})$

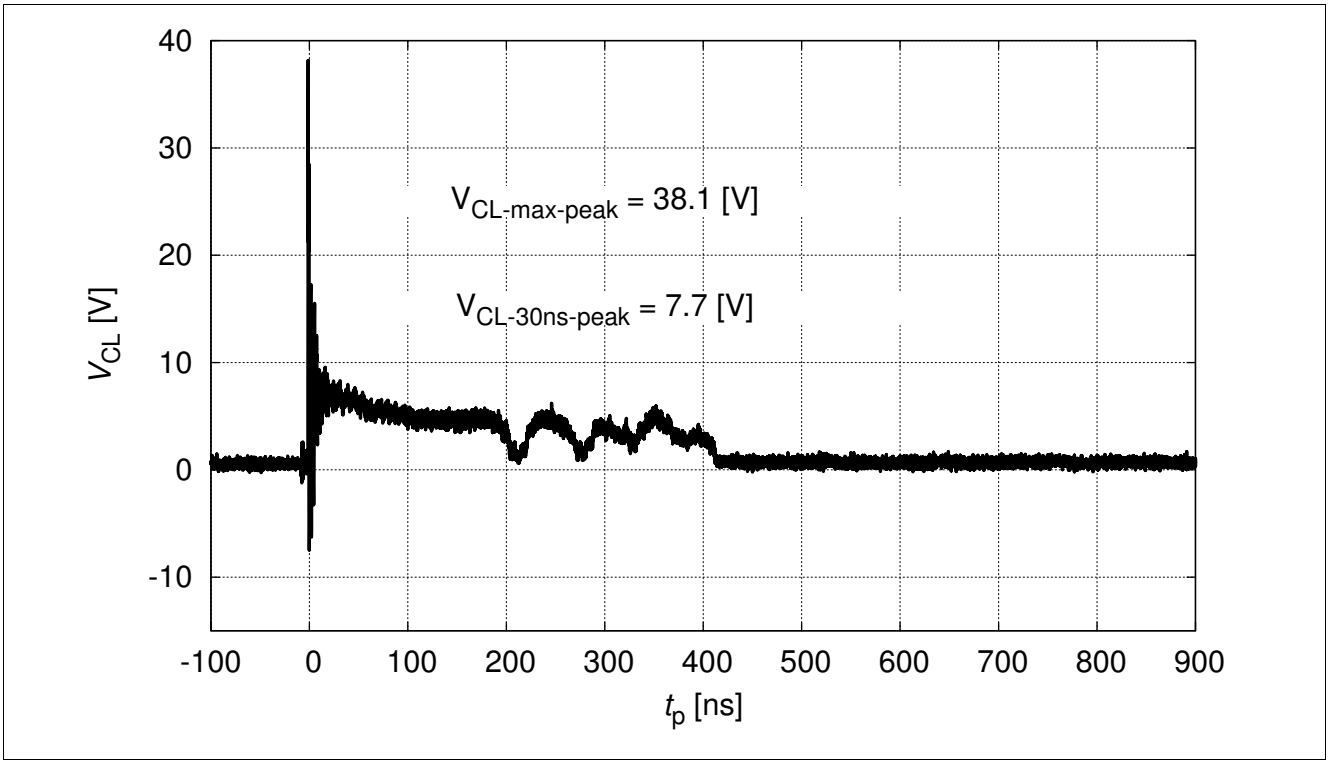

Figure 2-7 IEC61000-4-2 : $V_{CL} = f(t)$, 8 kV positive pulse from pin 1 to pin 2

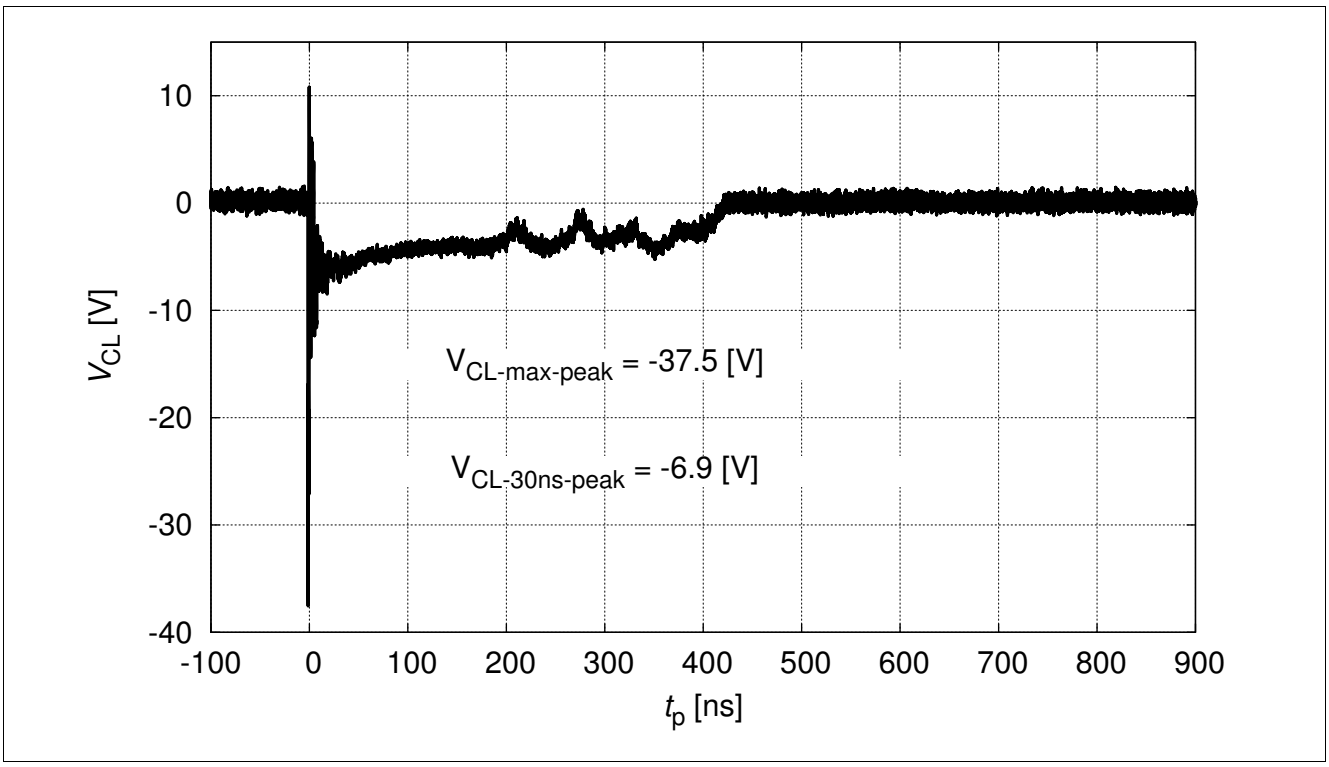

Figure 2-8 IEC61000-4-2 : $V_{CL} = f(t)$, 8 kV negative pulse from pin 1 to pin 2

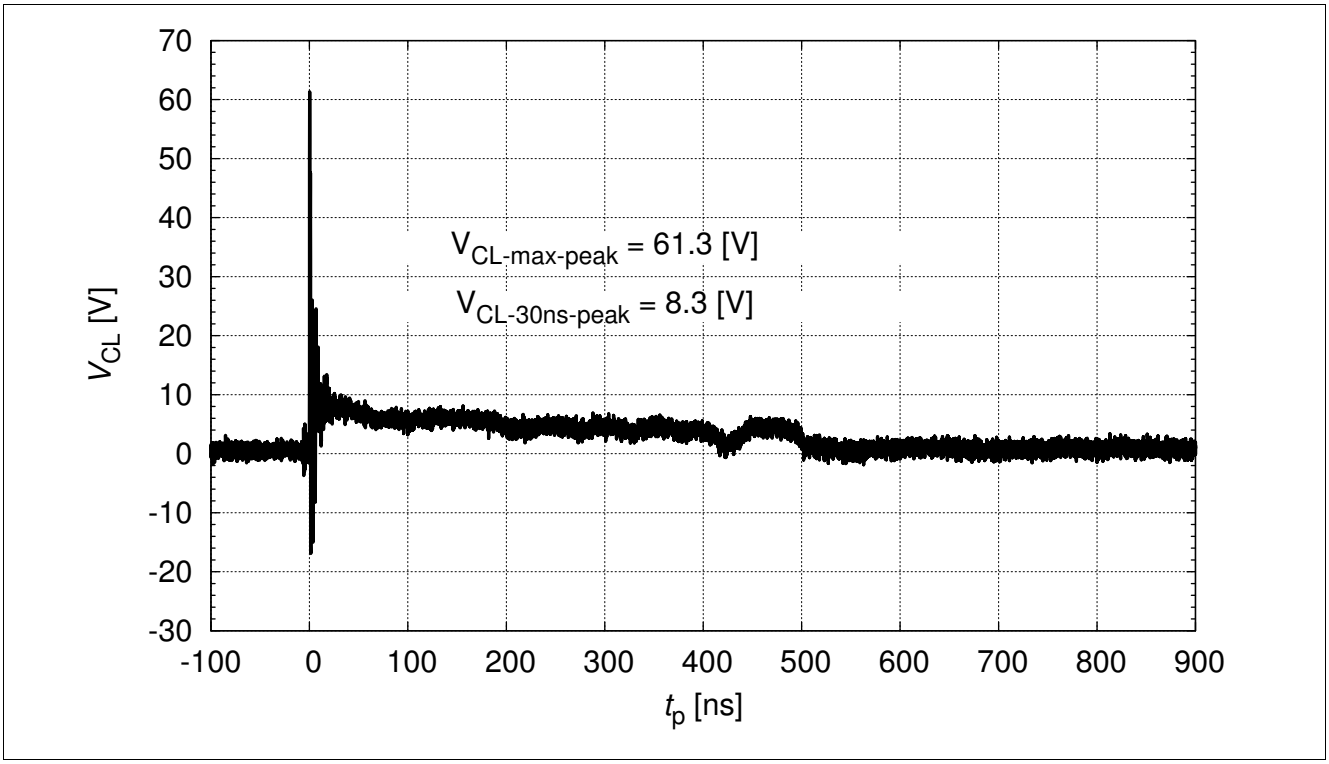

Figure 2-9 IEC61000-4-2 : $V_{CL} = f(t)$, 15 kV positive pulse from pin 1 to pin 2

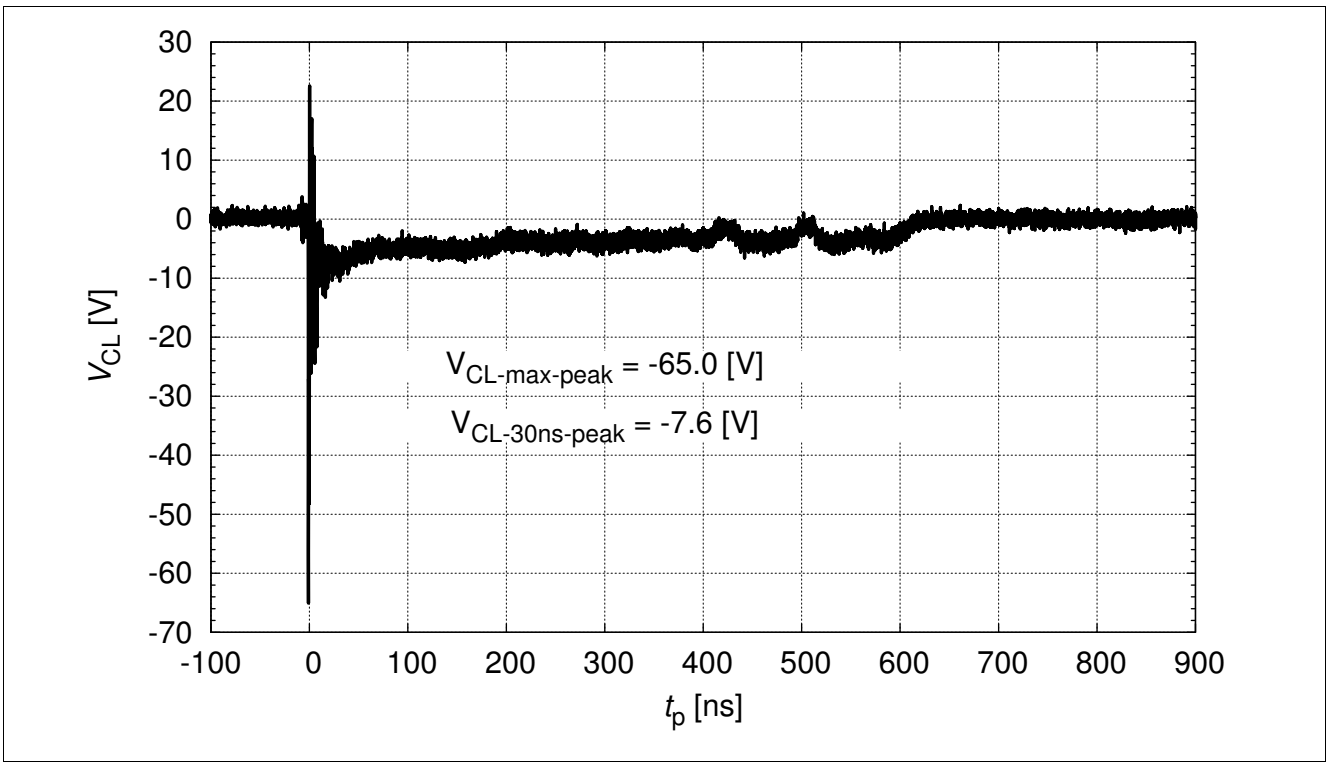

Figure 2-10 IEC61000-4-2 : $V_{CL} = f(t)$, 15 kV negative pulse from pin 1 to pin 2

3 Application Information

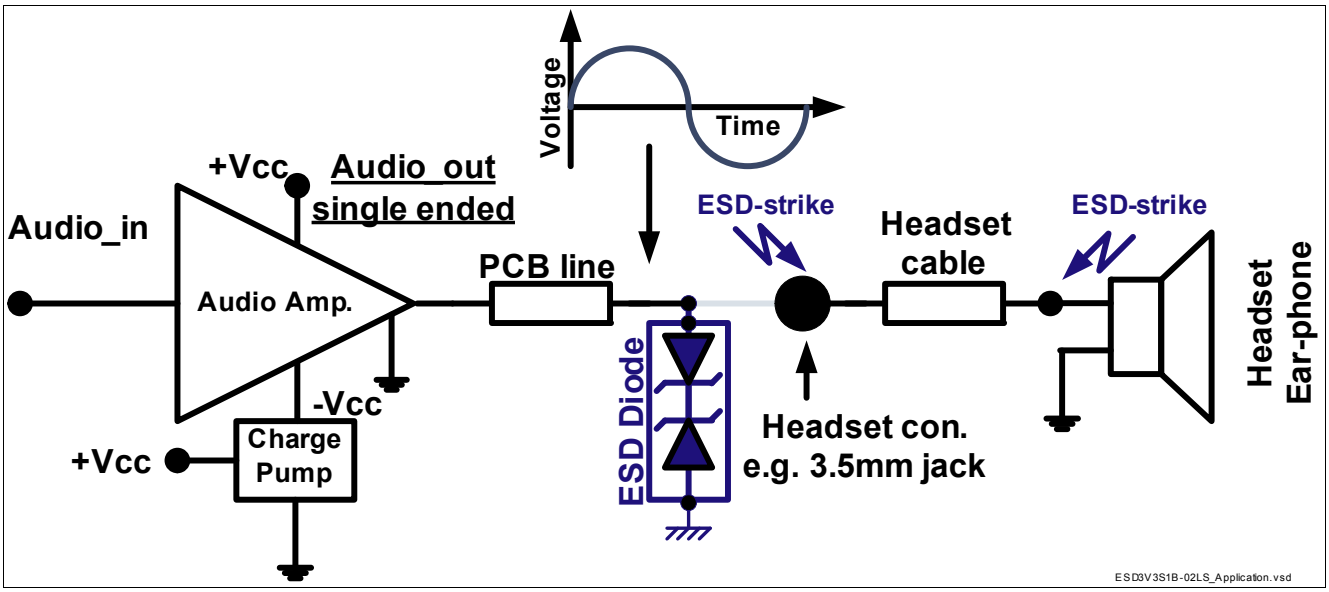

Figure 3-1 Single line, bi-directional ESD / Transient protection

4 Package Information

4.1 TSSLP-2-3

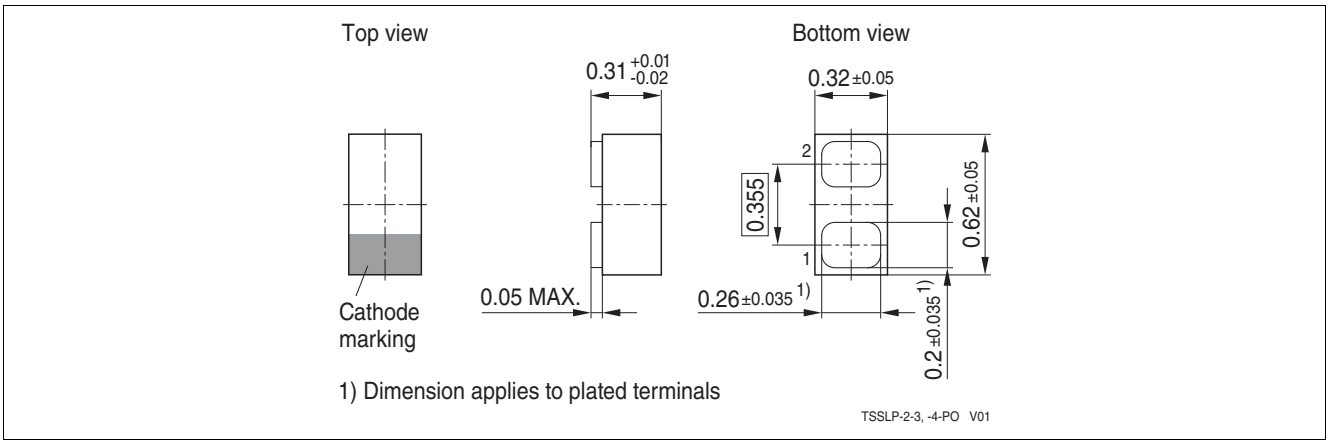

Figure 4-1 TSSLP-2-3: Package overview (dimension in mm)

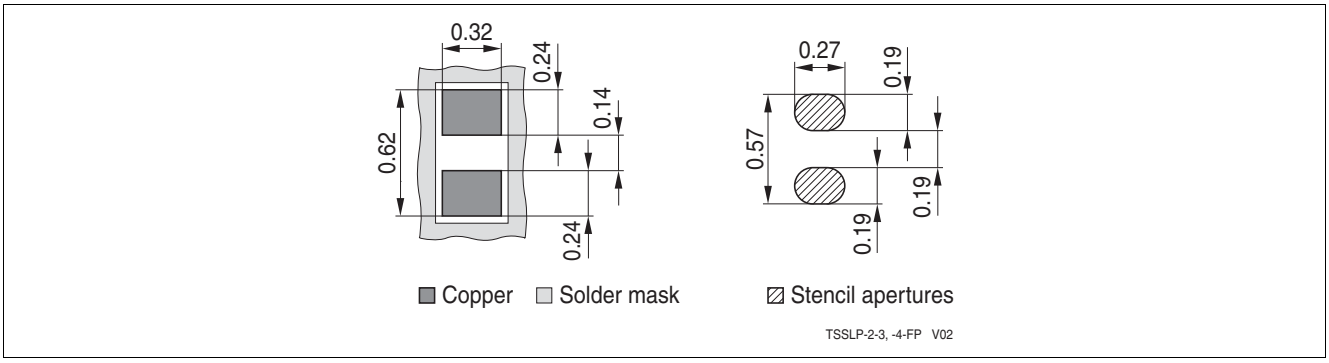

Figure 4-2 TSSLP-2-3: Footprint (dimension in mm)

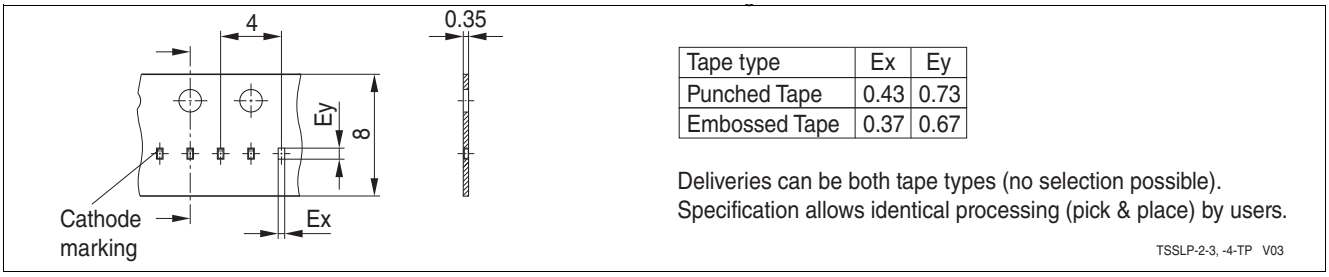

Tape type	Ex	Ey
Punched Tape	0.43	0.73
Embossed Tape	0.37	0.67

Figure 4-3 TSSLP-2-3: Tape information (dimension in mm)

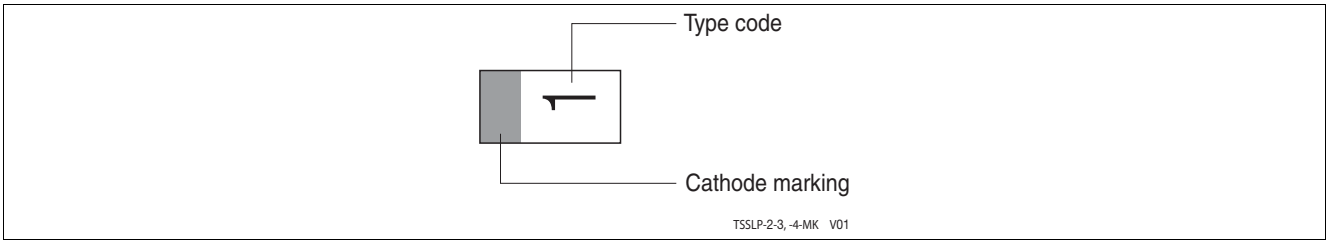

Figure 4-4 TSSLP-2-3: Marking (example)

4.2 TSLP-2-19

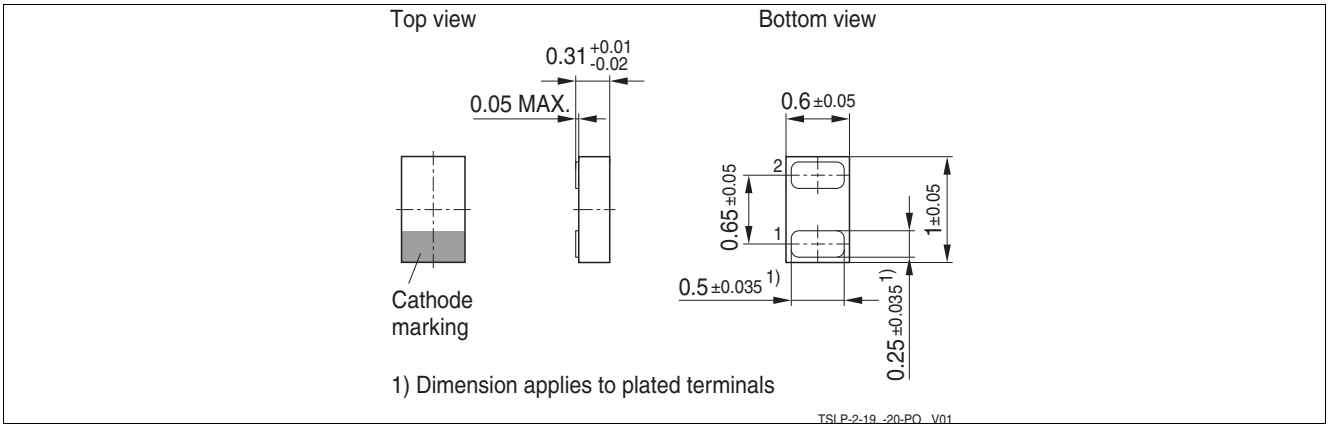

Figure 4-5 TSLP-2-19: Package outline(dimension in mm), proposal

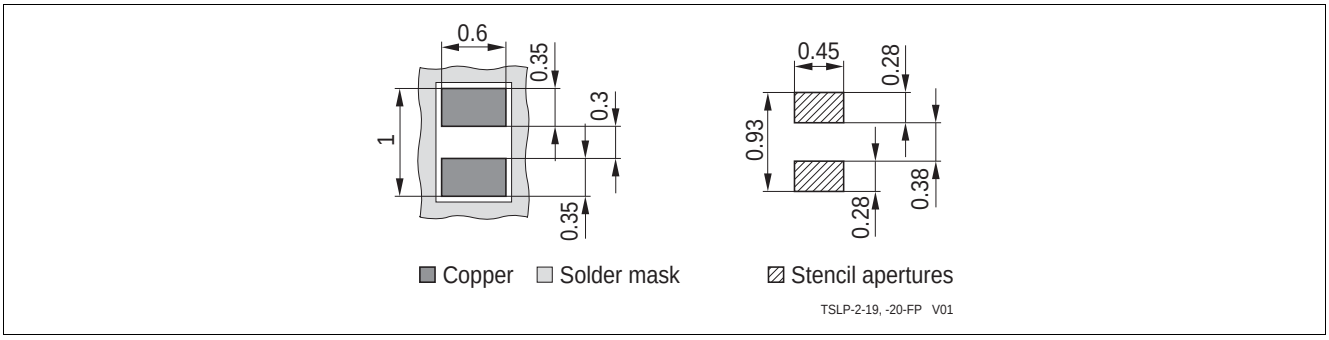

Figure 4-6 TSLP-2-19: Footprint (dimension in mm), proposal

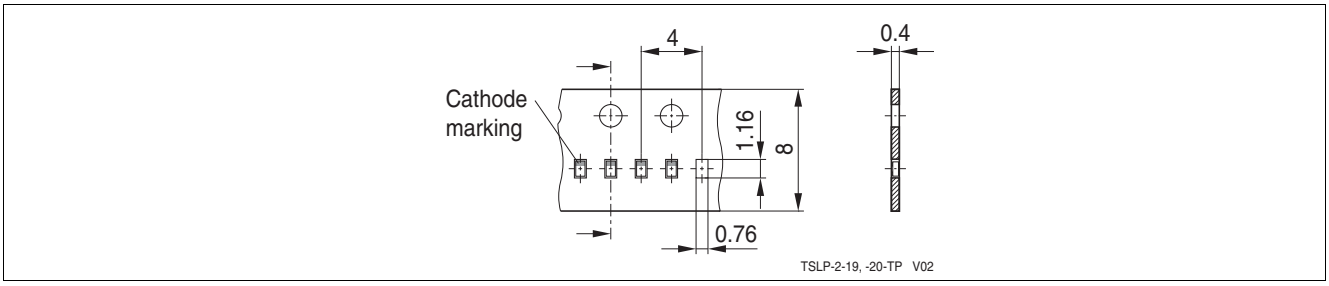

Figure 4-7 TSLP-2-19: Tape information (dimension in mm), proposal

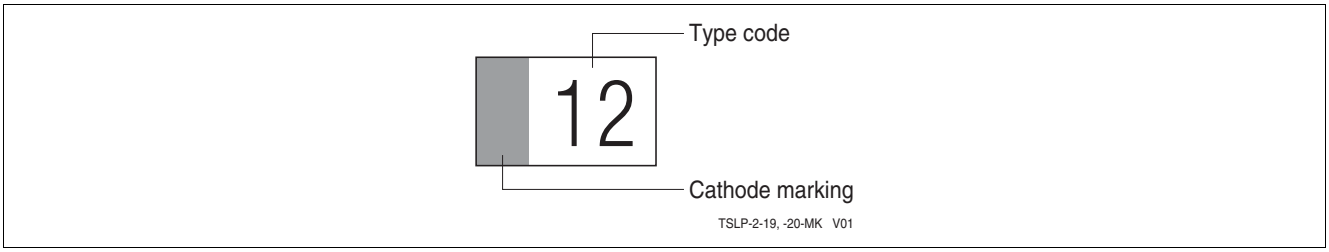

Figure 4-8 TSLP-2-19: Marking (example)

References

[1] Infineon AG - **Application Note AN210:** Effective ESD Protection design at System Level Using VF-TLP Characterization Methodology

[2] Infineon AG - Recommendations for PCB Assembly of Infineon TSLP and TSSLP Packages

w w w . i n f i n e o n . c o m

Published by Infineon Technologies AG