IRAUDPS1

12V System Scalable 250W to1000W Audio Power Supply For Class D Audio Power Amplifiers Using the IR2085 self oscillating gate driver And Direct FETS IRF6648

By

Manuel Rodríguez

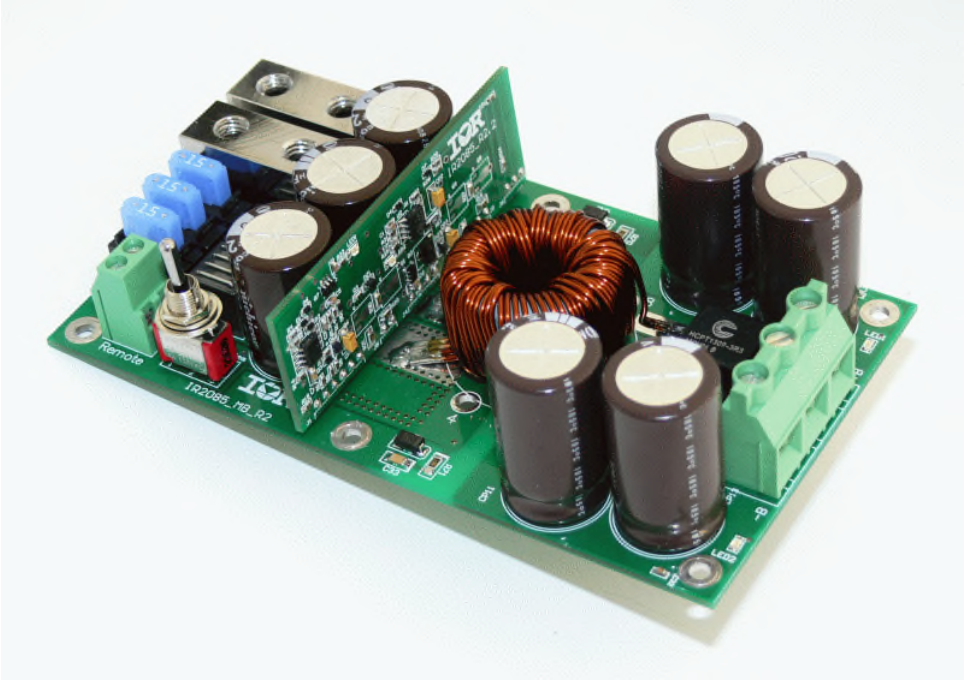

CAUTION:

International Rectifier suggests the following guidelines for safe operation and handling of IRAUDPS1 Demo Board:

- **Always wear safety glasses whenever operating Demo Board**
- **Avoid personal contact with exposed metal surfaces when operating Demo Board**
- **Turn off Demo Board when placing or removing measurement probes**

Item	Table of Contents	Page
1	Introduction	3
2	System Specifications	4
3	Functional Block Description	5
4	IRAUDPS1 Block Diagram	6
5	Schematic IR2085 module	7
6	IRAUDPS1 mother board schematic	8
7	IR2085 module PCB layout	9
8	IRAUDPS1 mother PCB layout	10-11
9	BOM of IR2085 module	12
10	BOM of IRAUDPS1 mother board	13-14
11	BOM of Mechanical parts	14
12	Scalable IRAUDPS1 power table	14
13	Performance and test procedure	15-21
14	IRAUDPS1 Fabrication Drawings	22-24
15	Transformer winding instructions	25-27
16	Design example	28
17	Transformer design	28-30
18	MOSFET selection	30
19	Switching losses	31
20	Efficiency calculations	32
21	Frequency of oscillation	33
22	Selecting dead time	33
23	Over Temperature Protection	33
24	Short circuit protection	33
25	BJT gate driver option	33
26	Music Load	34
25	Revision Changes Descriptions	35

Introduction

The IRAUDPS1 reference design is a 12 volts systems Audio Power Supply for automotive applications designed to provide voltage rails (+B and –B) for Class D audio power amplifiers

This reference design demonstrates how to use the IR2085 as PWM and gate driver for a Push-Pull DC to DC converter, along with IR's Direct FETS IRF6648

The resulting design uses a compact design with the Direct FETS and provides all the required protections.

NOTE: The IRAUDPS1 is an scalable power output design, and unless otherwise noted, this user's manual and the reference design board is the 500W

Table 1 IRAUDPS1 scalable table

IRAUDPS1				
		250W	**500W**	**1000W**
Nominal Voltage output	+B, -B	±35V	±35V	±35V
Nominal Output Current	+B, -B	3.5A	7A	14A
Application		Stereo System 100W x 2	8 channel System 100W x 4	8 channel System 100W x 8
IR Class D Model		IRAUDAMP7D	IRAUDAMP8	IRAUDAMP8 x 2
Detailed output power versions that can be configured by replacing components given in the component selection of Table 7 on page 14				

.

System Specification

All specs and tests are based on a 14.4V battery voltage supplying an International Rectifier Class D reference design with all channels driven at 1 kHz and a resistive load.

Table 2

Specification	250W	IRAUDPS1	1000W
IR Class D Load	IRAUDAMP5	IRAUAMP8	IRAUAMP8 x 2
Input current with no load	0.35A +/- 10%	0.35A +/- 10%	0.35A +/- 10%
ACC Remote ON Level	4.5-6V	4.5-6V	4.5-6V
ACC input impedance	10k+/- 10%	10k+/- 10%	10k+/- 10%
Turn ON delay	1-1.5 Sec	1-1.5 Sec	1-1.5 Sec
In-Rush Current	30A Max	30A Max	30A Max
Output power full loaded	250W	500W	1000W
Input current full loaded	18A	35.5A	71A
Output Current per supply	3.5A	7A	14A
Output voltage	+/- 35V +/-10%	+/- 35V +/-10%	+/- 35V +/-10%
Regulation	+/- 10%	+/- 10%	+/- 15%
Ripple outputs, laded at 400W audio 1khz	1.5V P.P.	1.8V P.P.	2V P.P.
Efficiency at ½ and full of rated power	90-85%	92-87%	90-80%
Isolation between Battery and Outputs Gnd	1k Ohm	1k Ohm	1k Ohm
Battery OVP	18-18.5V	18-18.5V	18-18.5V
Battery UVP	8.0-8.5V	8.0-8.5V	8.0-8.5V
Output SCP	10A	20A	40A
Outputs OVP	40-45V	40-45V	40-45V
Over temperature protection (OTP)	90C +/- 5C	90C +/- 5C	90C +/- 5C
OTP hysteresis	10C	10C	10C
Led Indicators	Red LED= SCP, Blue LED= OK		
Size	3" W x 5.3" L x 1.5" H		

Table 3
+B, -B Voltage outputs vs. Battery voltage all models

Voltage outputs at 16.0V battery input with no signal input at class D	+/- 39.5V +/- 10%
Voltage outputs at 12.0V	+/- 28V +/- 10%
Voltage outputs at 8.0V battery input with no signal input at class D	+/- 19.2V +/- 10%

Functional Block Description

Fig 1 below shows the functional block diagram which basically is an isolated DC-DC converter with a step-up push-pull transformer from a 12V system that converts it to +/- 35V using the IR2085 as a PWM and gate driver along with the Direct FETS IRF6648.

The IR2085 Module contains all the housekeeping circuitry to protect the IRAUDPS1 against streamer conditions which are:

1. Soft start circuit in order to control the inrush-current at the moment the IRAUDPS1 power is turned ON
2. Short Circuit protection at outputs (SCP), which will shut down the IR2085 and remain in latch mode until the Remote ON /OFF switch is released
3. 12V system Over Voltage protection (OVP1). if Battery input voltage is greater than 18V.. this could happen when the vehicle's battery is disconnected or a vehicle's alternator fails.
4. Over voltage Output (OVP2) is greater than +/-45V at +B terminal if battery input is greater than 16V
5. Over Temperature Protection (OTP), resistor Thermistor senses the chassis temperatures from Direct FETS

Fig 2 is the complete schematic for the IR2085 Module

Fig 3 is the complete schematic for the IRAUDPS1 with all scalable components required

Figs 4 to Fig 10 are the respective PCB layouts for the IR2085 Module and the IRAUDPS1 motherboard

Tables 4 to Table 6 are the respective bills of materials

Table 7 is the IRAUDPS1 detailed output power versions that can be configured by replacing components

IRAUDPS1 Block Diagram

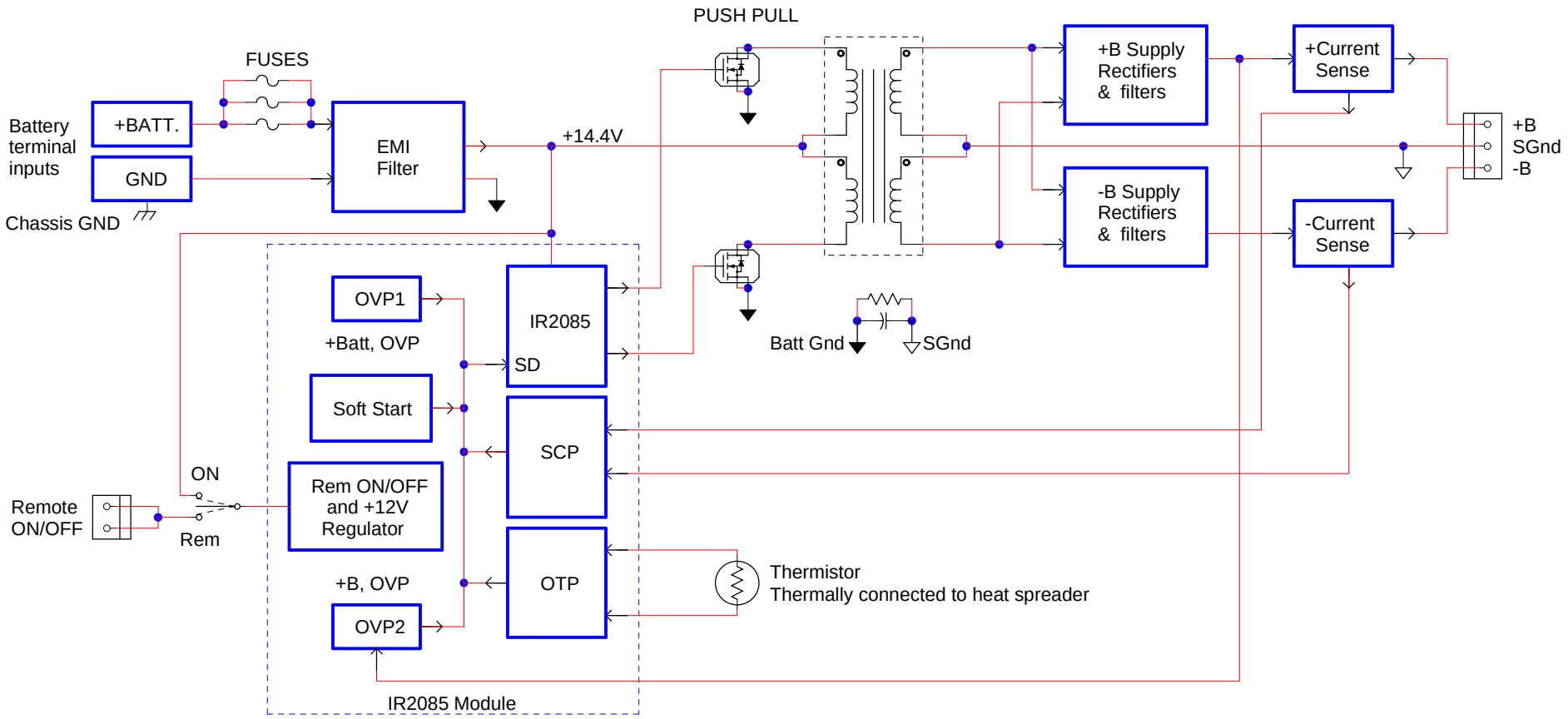

Fig 1 Functional Block Diagram

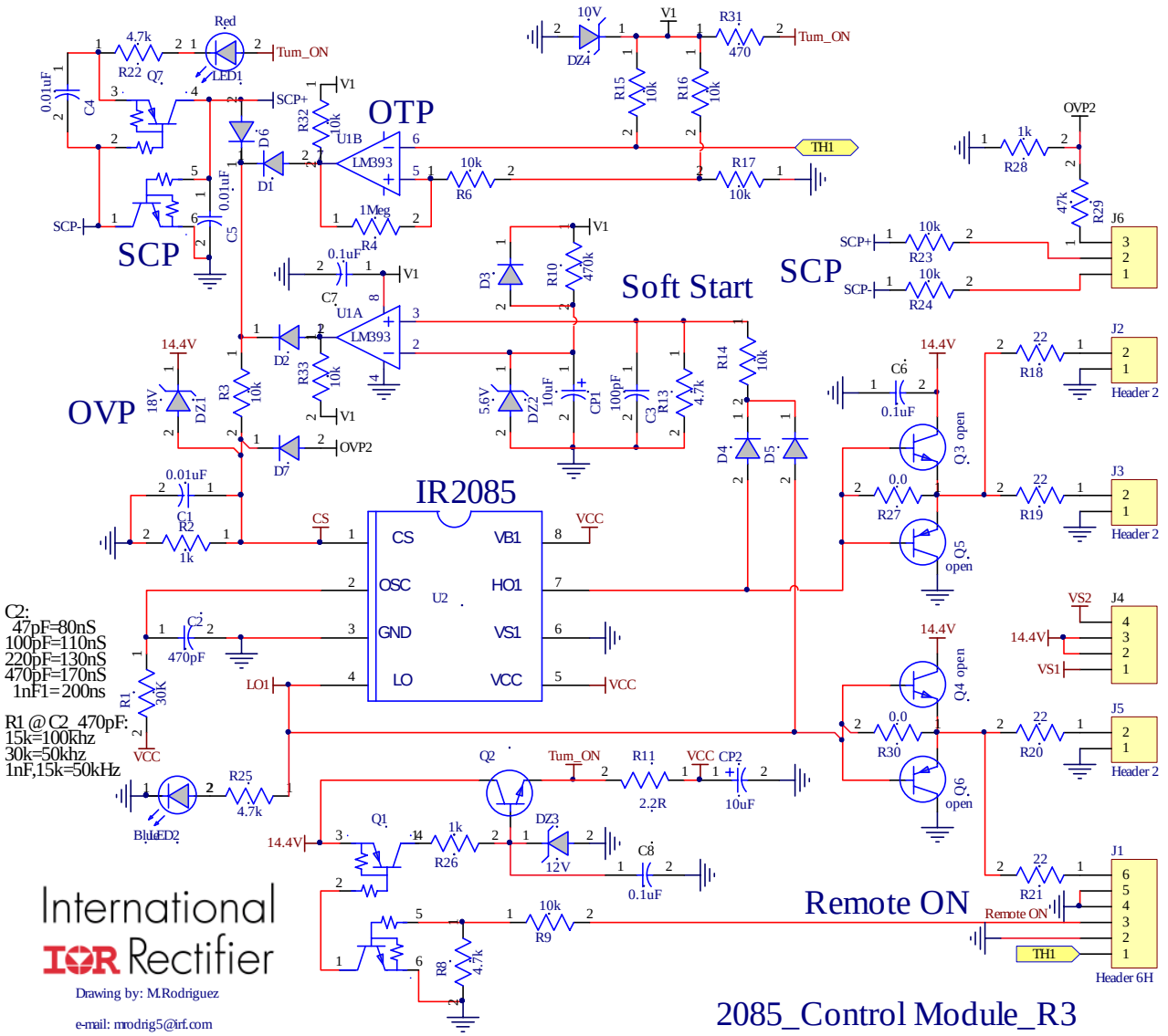

Fig 2 schematic of IR2085 Module

IRAUDPS1, 12V System SMPS, 500W Converter with Direct Fets

And IR2085 PWM Module

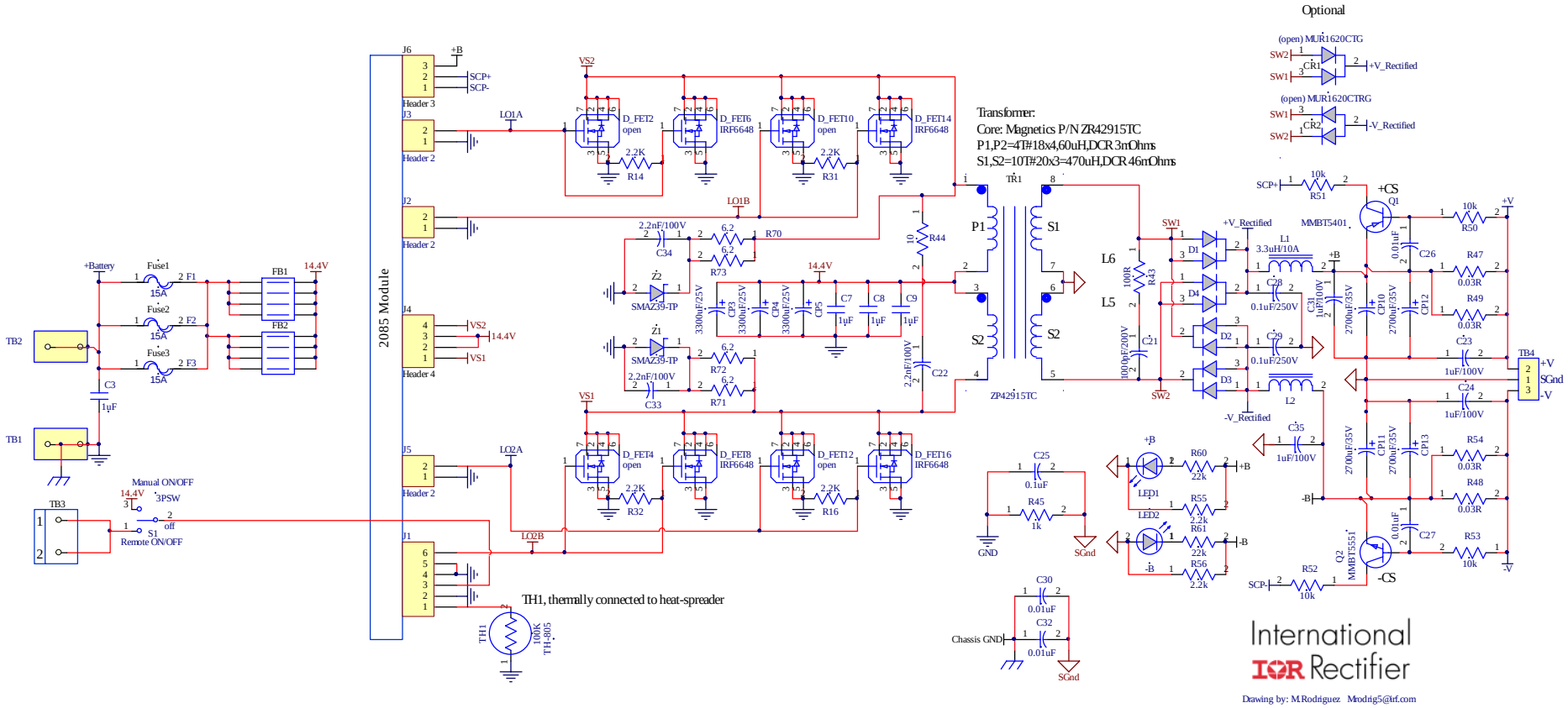

Fig 3 IRAUPS1 Mother Board Schematic

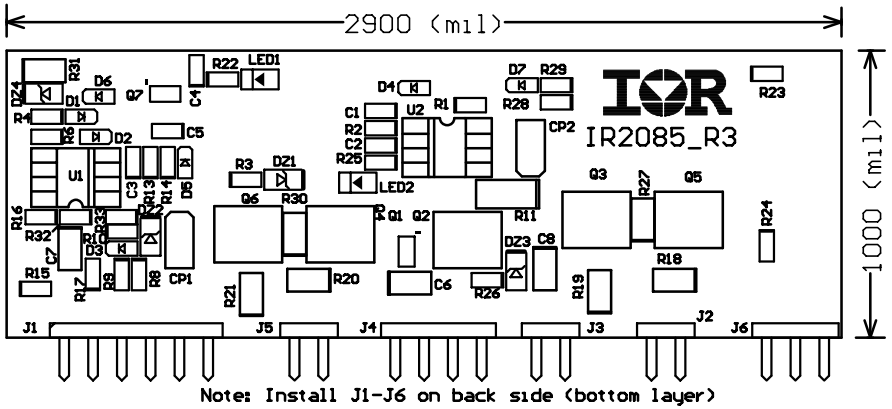

Fig 4 IR2085 Module Top silk screen layout

.

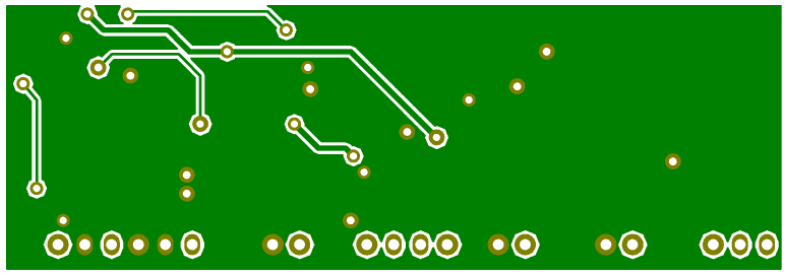

Fig 5 IR2085 Module bottom side layout

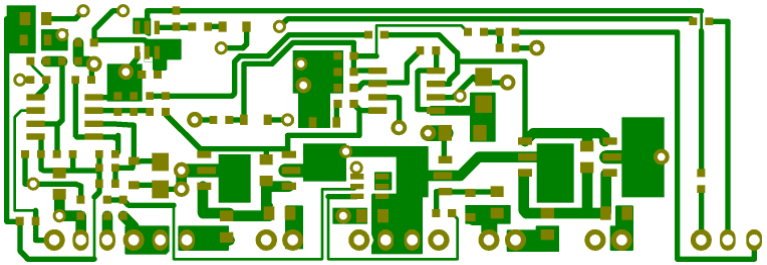

Fig 6 IR2085 Module Top side layout

.

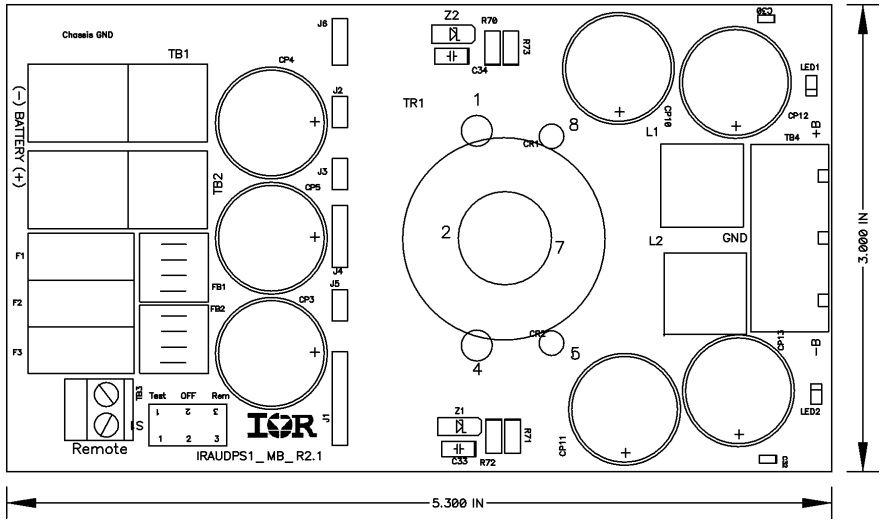

Fig 7 IRAUDPS1 Mother Board Top silk screen layout

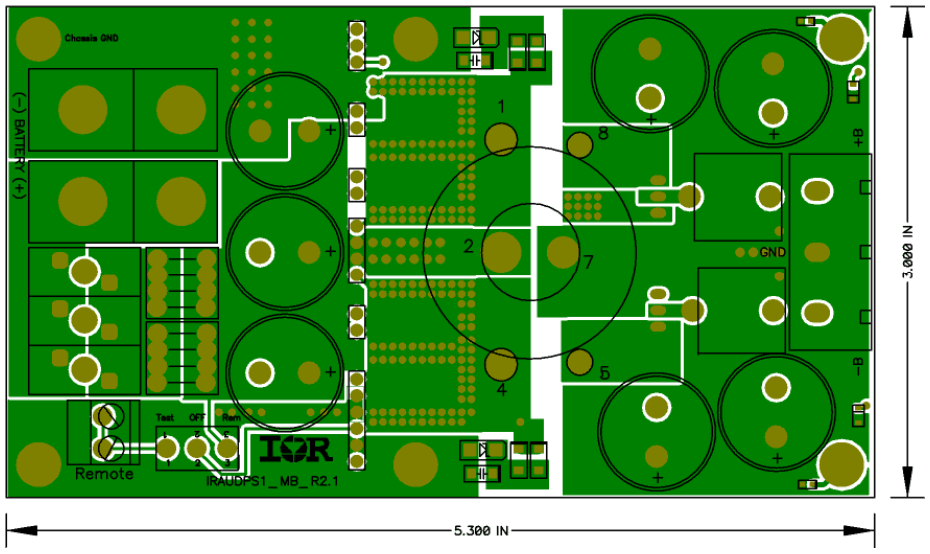

Fig 8 IRAUDPS1 Mother Board Top copper

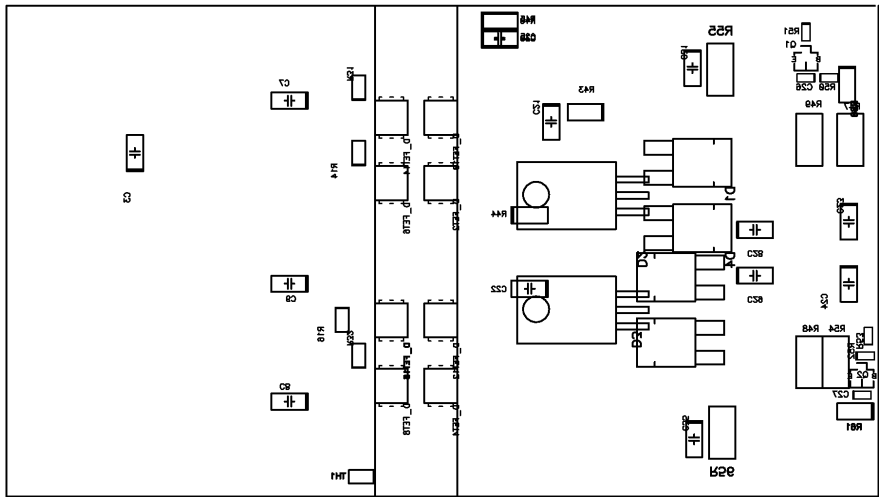

Fig 9 IRAUDPS1 Mother Board Bottom silk screen layout

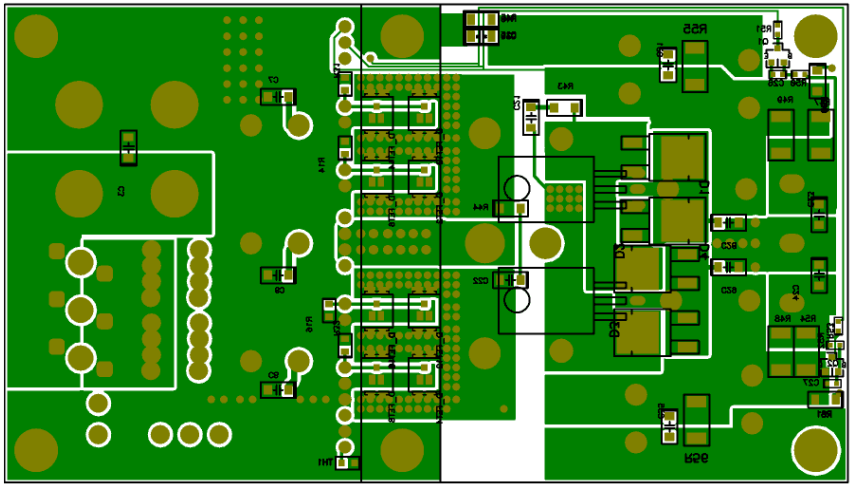

Fig 10 IRAUDPS1 Mother Board Bottom layout

Bill of Materials

Table 4 IRS2085 Module

Quantity	Value	Description	Designator	Digikey P/N	Vendor
3	0.01uF	CAP 10000PF 50V CERM X7R 0603	C1, C4, C5	PCC1784CT-ND	Panasonic - ECG
1	470pF	CAP CER 470PF 50V 5% C0G 0603	C2	490-1443-1-ND	Murata
1	100pF	CAP CERAMIC 100PF 50V NP0 0603	C3	311-1069-1-ND	Yageo
3	0.1uF	CAP CERM .10UF 50V 20% 0805 SMD	C6, C7, C8	478-3351-1-ND	AVX Corporation
2	10uF	CAP TANTALUM 10UF 16V 10% SMD	CP1, CP2	495-2236-1-ND	Kemet
7	1N4148WT-7	DIODE SWITCH 100V 150MW SOD-523	D1, D2, D3, D4, D5, D6, D7	1N4148WTDICT-ND	Diodes Inc
1	18V	SOD123_Z	DZ1	MMSZ5248BS-FDICT-ND	Diodes Inc
1	5.6V	DIODE ZENER 5.6V 200MW SOD-323	DZ2	UDZSTE-175.6BCT-ND	Rohm
1	12V	DIODE ZENER 200MW 12V SOD323	DZ3	BZT52C12S-TPMSCT-ND	Micro Commercia
1	10V	DIODE ZENER 10V 200MW SOD-323	DZ4	MMSZ5240BSDICT-ND	Diodes Inc
1	Header	Header, 6-Pin, Right Angle	J1,J2,J3,J4,J5.J6	929500E-01-01-ND	3M
1	Red	LED RED ORAN CLEAR THIN 0805 SMD	LED1	160-1422-1-ND	Lite-On Inc
1	Blue	LED 468NM BLUE CLEAR 0805 SMD	LED2	160-1645-1-ND	Lite-On Inc
2	XN04311	TRANS ARRAY PNP/NPN W/RES MINI6P	Q1, Q7	XN0431100LCT-ND	Panasonic - SSG
1	PBSS305NX	TRANS NPN 80V 4.6A SOT-89	Q2	568-4177-1-ND	NXP
2	open	(OPEN) TRANS NPN 80V 4.6A SOT-89	Q3, Q4	568-4177-1-ND	NXP
2	open	(OPEN) TRANS PNP 80V 4A SOT-89	Q5, Q6	568-4178-1-ND	NXP
1	30K	RES 30K OHM 1/10W 5% 0603 SMD	R1	RHM30KGCT-ND	Rohm
1	1k	RES 1K OHM 1/10W 5% 0603 SMD	R2	RHM1.0KGCT-ND	Rohm
11	10k	RES 10K OHM 1/10W 5% 0603 SMD	R3,R6,R9,R14, R15, R16, R17, R23, R24, R32,R33	RHM10KGCT-ND	Rohm
1	1Meg	RES 1.0M OHM 1/10W 5% 0603 SMD	R4	311-1.0MGRCT-ND	Yageo
4	4.7k	RES 4.7K OHM 1/10W 5% 0603 SMD	R8, R13, R22, R25	RHM4.7KGCT-ND	Rohm
1	470k	RES 470K OHM 1/10W 5% 0603 SMD	R10	RHM470KGCT-ND	Rohm
1	2.2	RES 2.2 OHM 1/4W 1% 1206 SMD	R11	P2.2RCT-ND	Panasonic - ECG
4	22	RES 22 OHM 1/8W 5% 0805 SMD	R18, R19, R20, R21	RHM22ARCT-ND	Rohm
2	1k	RES 1.0K OHM 1/10W 5% 0603 SMD	R26, R28	RHM1.0KGCT-ND	Rohm
2	0.0	RES 0.0 OHM 1/8W 5% 0805 SMD	R27, R30	RHM0.0ARCT-ND	Rohm
1	47k	RES 47K OHM 1/10W 5% 0603 SMD	R29	RHM47KGCT-ND	Rohm
1	470	RES 470 OHM 1/8W 5% 0805 SMD	R31	RHM470ARCT-ND	Rohm
1	LM393DR2G	IC COMP DUAL OFFSET LV 8SOIC	U1	LM393DR2GOSCT-ND	ON Semi
1	IR2085	Controller and Gate Driver	U2	IR2085	International Rect

Table 5 IRAUDPS1 Mother Board Bill of Materials

Quantity	Value	Description	Designator	Digikey P/N	Vendor
4	1uF/50V	CAP CER 1UF 50V X7R 1206	C3, C7, C8, C9	490-3908-1-ND	Murata Electronics North
1	1000pF/200V	CAP CER 1000PF 10% 200V X7R 1206	C21	478-1505-1-ND	AVX Corporation
3	2.2nF/100V	CAP CER 2200PF 10% 100V X7R 1206	C22, C33, C34	478-1519-1-ND	AVX Corporation
4	1uF/100V	CAP CER 1UF 100V X7R 1206	C23, C24, C31, C35	490-3909-1-ND	Murata Electronics
4	0.01uF	CAP 10000PF 50V CERM X7R 0603	C26, C27, C30, C32	PCC1784CT-ND	Panasonic - ECG
3	0.1uF/250V	CAP CERAMIC .1UF 250V X7R 1206	C28, C29,C25	399-4674-1-ND	Kemet
3	3300uF/25V	CAP 3300UF 25V ELECT PW RADIAL	CP3, CP4, CP5	493-1842-ND	Nichicon
4	1200uF/63V	CAP 1200UF 63V ELECT PW RADIAL	CP10, CP11, CP12, CP13	493-1958-ND	Nichicon
1	(open)	DIODE Comm Cathode ULT FAST 16A 200V TO220	CR1	MUR1620CTGOS-ND	ON Semiconductor
1	(open)	DIODE Comm Anode ULT FAST 16A 200V TO220	CR2	MUR1620CTRGOS-ND	ON Semiconductor
4	STTH1002CB	DIODE FAST 200V 10A D-PAK	D1, D2, D3, D4	497-3536-5-ND	STMicroelectronics
4	open	Direct-FET MOSFET N-CH 60V 86A	FET2, FET4,FET10,FET12	IRF6648TR1PBFCT-ND	International Rectifier
4	IRF6648	Direct-FET MOSFET N-CH 60V 86A	FET6, FET8, FET14,FET16	IRF6648TR1PBFCT-ND	International Rectifier
3	Fuse Holder	FUSEHOLDR MINI VERT PCB MNT SNGL	F1, F2, F3	F065-ND	Littelfuse Inc
2	FERRITE QUAD LINE 10A	FERRITE 3 LINE 10A 342 OHMS	FB1, FB2	240-2494-ND	Stwart
3	15A	FUSE BLADE 15A/32V MINI FAST-ACT	Fuse1, Fuse2, Fuse3	F992-ND	Littelfuse Inc
1	Module_2085_R2	Control Module	J1,J2, J3, J4,J5,J6	Custom	IR Module_2085_R2 PCB
2	3.3uH/10A	INDUCTOR POWER 3.31UH 11.4A T/H	L1, L2	513-1522-ND	Coiltronics
1	Blue	LED 468NM BLUE CLEAR 0805 SMD	LED1	160-1645-1-ND	Lite-On Inc
1	Blue	LED 468NM BLUE CLEAR 0805 SMD	LED2	160-1645-1-ND	Lite-On Inc
1	MMBT5401	TRANSISTOR PNP 150V SOT-23	Q1	MMBT5401FSCT-ND	Fairchild Semiconductor
1	MMBT5551	TRANSISTOR NPN 160V SOT-23	Q2	MMBT5551FSCT-ND	Fairchild Semiconductor
4	2.2K	RES 2.2K OHM 1/8W 5% 0805 SMD	R14, R16, R31, R32	'RHM2.2KARCT-ND	Rohm
1	100R	RES 100 OHM 1/4W 5% 1206 SMD	R43	311-100ERCT-ND	Yageo
1	10	RES 10 OHM 1/4W 5% 1206 SMD	R44	RHM10ERCT-ND	Rohm
1	1k	RES 1.0K OHM 1/4W 5% 1206 SMD	R45	RHM1.0KERCT-ND	Rohm
4	0.03R	RES .03 OHM 1W 1% 2512 SMD	R47, R48, R49, R54	WSLG-.03CT-ND	Vishay/Dale
4	10k	RES 10K OHM 1/10W 5% 0603 SMD	R50, R51, R52, R53	RHM10KGCT-ND	Rohm
2	2.2k	RES 2.2K OHM 1W 5% 2512 SMD	R55, R56	PT2.2KXCT-ND	Panasonic - ECG
2	22k	RES 22K OHM 1/4W 5% 1206 SMD	R60, R61	RHM22KERCT-ND	Rohm
4	6.2	RES 6.2 OHM 1/4W 5% 1206 SMD	R70, R71, R72, R73	RHM6.2ERCT-ND	Rohm

1	Toggle SW 3Pos	Toggle SW 3Pos	S1	EG2377-ND	E-Switch
2	Gold terminal block	Gold terminal Block #8 AWG	TB1, TB2	070-850	Audio Express
1	TB 2 terminals	CONN TERM BLOCK 2POS 5MM PCB	TB3	277-1022-ND	Phoenix Contact
1	1714984	CONN TERM BLOCK 3POS 9.52MM PCB	TB4	277-1272-ND	Phoenix Contact
1	100K	THERMISTOR 100K OHM NTC 0805 SMD	TH1	490-2451-1-ND	Murata Electronics
1	ZP42915TC	Power Transformer	TR1	Custom TR500-2085	Magnetics
2	SMAZ39-TP	DIODE ZENER 1W 39V SMA	Z1, Z2	SMAZ39-TPMSCT-ND	Micro Commercial Co

.

Table 6 Mechanical BOM

Quantity	Description	Value	Digikey P/N	Vendor
1	Aluminum Bar heat spreader R2	Aluminum Bar 2085	Custom	China
1	Aluminum Base heat sink R2	Aluminum Bar 2085	Custom 2085	China
1	Print Circuit Board IR2085_MB_R2 .PCB	PCB	IR2085_MB_R1 PCB Assy	China
1	THERMAL PAD .080" 4X4" GAPPAD	THERMAL PAD .080" 4X4" GAPPAD	Ber164-ND	Bergquist
2	(Optional) THERMAL PAD .007" W/ADH	(Optional) THERMAL PAD TO-220	173-7-240A	Wakefield
4	SPACER ROUND 1" #4 SCRW .250" BR	Stand off 0.250"	1454AK-ND	Keystone Electronics
6	NUT HEX 4-40 STAINLESS STEEL	Nut 4-40	H724-ND	Building Fasteners
6	SCREW MACHINE PHILLIPS 4-40X3/4	Screw 4-40X3/4	H350-ND	Building Fasteners
12	WASHER LOCK INTERNAL #4 SS	Washer #4 SS	H729-ND	Building Fasteners

.

Table 7 Scalable IRAUDPS1 by changing the following components

Component	Notes	250W	IRAUDPS1	1000W
Power Transformer T1	See winding instructions	IR P/N TR-2085-250W	IR P/N TR-2085-500W	IR P/N TR-2085-1000W
Direct FETs	Populate the respective Direct FET by IR6648 as shown on respective model	D_FET6, D_FET16	D_FET6,D_FET8, D_FET14, D_FET16 D_FET2,D_FET4, D_FET10, D_FET12	D_FET6,D_FET8, D_FET14, D_FET16 D_FET2,D_FET4, D_FET10, D_FET12
R47, R48, R47, R54	Short circuit sensitivity	0.06R	0.03R	0.015R
Fuse F1, F2, F3	Input Current	5A	15A	25A
D1, D2, D3, D4	Output Rectifiers	4A	8A	16A
CP3, CP4, CP5	Input Filters	2200uF/25V	3300uF/25V	3900uF/25V

.

IRAUPS1 Application and connections

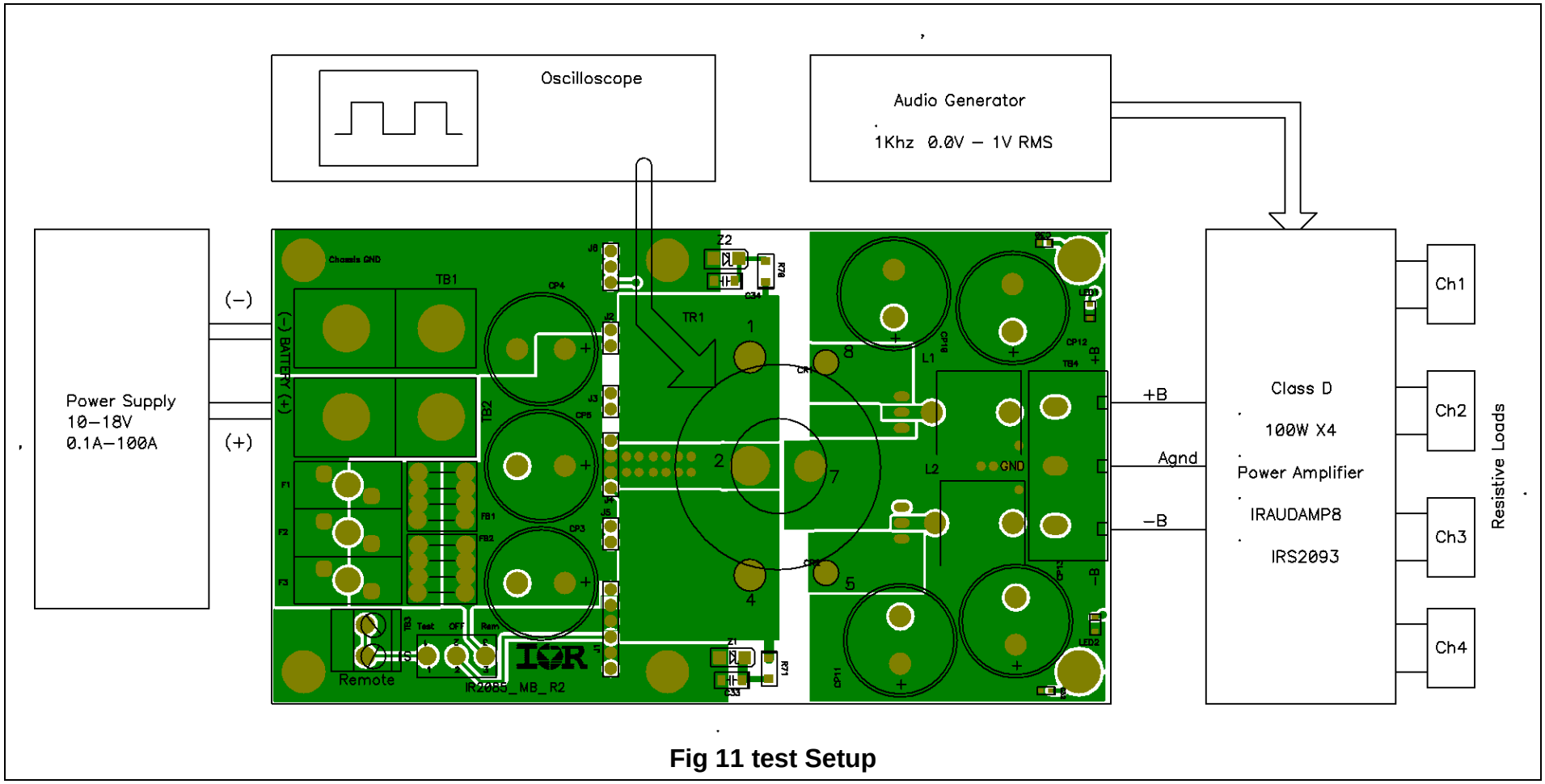

Fig 11 test Setup

Connector Description

Battery (-)	TB1	Terminal Board for Negative supply source
Battery (+)	TB2	Terminal Board for Positive supply source
+B output	TB4-1	Positive output of +B (+Bus Rail)
Analog GND	TB4-2	Output GND of +B and -B
-B output	TB4-3	Negative output of –B (-Bus Rail)

Switch Description

Remote-OFF-Test

Remote	This position PS1 can be turned ON remotely by vehicle's ACC (Accessory voltage) or vehicle's amplifier
OFF	IRAUDPS1 is always OFF regardless of ACC input
Test	IRAUDPS1 can be turned ON manually or for test purpose

LED Indicator Description

LED1 Red	Indicate the presence of a short circuit condition on +B or -B
LED2 Blue	Indicate the presence of PWM pulses from IR2085
LED3 Blue	Indicate the presence of +B voltage
LED4 Blue	Indicate the presence of –B voltage

Power Source Requirements

The power source shall be capable of delivering 80 Amps with current limited from 1A to 80A during the test; the output voltage shall be variable from 8V to 19V during the test

Test Procedure

1. Pre-adjust the main source power supply to 14.4V and set current limit to 1A
2. Turn on the main source power supply to standby mode
3. On IRAUDPS1 (Unit Under Test) Set the Remote ON switch to OFF (center)
4. Connect an oscilloscope probe on transformer terminals TR1 pin 1
5. **Do NOT Connect the Class D Amp IRAUDAMP8 (IR2093) to +B and –B yet**
6. Connect the resistive load to the class D Amp
7. Set the Audio OSC to 1 kHz and output level to 0.0V

Power up:

8. Turn ON the main source power supply, the input current from the source power supply should be 0.0mA and all LEDS should be OFF
9. Look at LED2 on the IR2085_Module, it should be OFF, then turn ON the Remote-OFF-Test to Test switch while you observe LED2; it will light slightly after turning ON said switch, then LED2 will come fully bright one second after the Remote switch was turned ON (Test position)
10. In the mean time, the figure on the oscilloscope will start from narrow pulses, up to 50% duty cycle and the oscillation frequency shall be 50kHz as shown on Fig 12 and Fig 13 below; This is the soft-start test

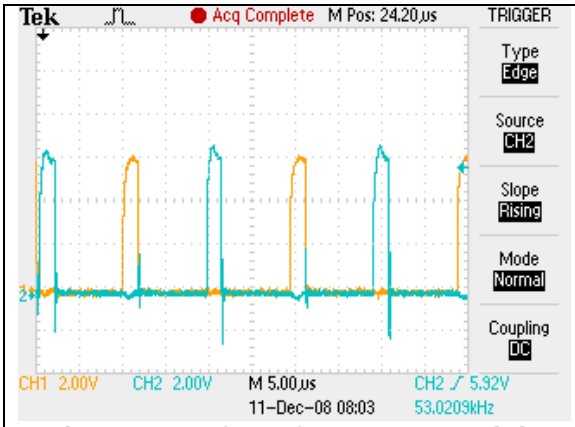

Fig 12, waveform from 2085 module

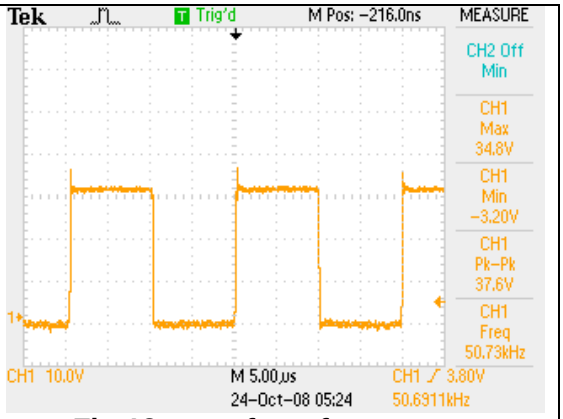

Fig 13, waveform from power transformer

11. The power consumption from the source power supply shall be 0.35A maximum typical is 0.30A and the +B and –B LEDs will turn ON as well
12. Measure the voltage on +B and –B; it will be +/-35V ±1.5V respectively; This is the transformer's windings turns ratio and full-wave rectifiers

UVP Test

13. Decrease the source power supply slowly until it reaches around 8 volts while you observe LED2 or the oscilloscope. LED2 will turn OFF or oscilloscope's pulse will disappear at 8V ±1.5V. Typical is 8.02V

OVP1 Test

14. Increase the source power supply slowly until it reaches around 18V while you observe LED2 or the oscilloscope. LED2 will turn OFF or the oscilloscope's pulse will disappear at 18V ±1.5V. Typical is 18.5V

OVP2 Test

15. Increase the source power supply slowly until it reaches around 16V while you observe LED2 or the oscilloscope;. LED2 will begin blinking or the oscilloscope's pulse will decrease in duty cycle like Fig12 when +B reaches 45V ±2.5V. Typical is 45.0V

SCP Test

16. Adjust the source power supply to 14.4V, then while IRAUPS1 is ON, apply a short circuit between +B and AGnd with external wires, (do not make the SC on the terminal board or it will burn said terminals) LED1 will turn ON and LED2 will be OFF and stay OFF until the Rem-OFF-Test Switch is turned to OFF then ON again; This is the latch of OCP
17. Repeat the last step for –B and GND

Full Load Power Test

18. Turn OFF the IRAUDPS1 and Connect +B and –B to the Class D Amp IRAUDAMP8 (IR2093)
19. Turn ON the IRAUDPS1, the input current from the source power supply should be 0.85A ±0.5A; typical input current is 0.83A with the class D IRAUDAMP8 loaded with no signal input
20. Increase the current limit from the source power supply to 35A
21. Increase slowly the output level from the Audio Oscillator until the Class D amp gets 100W RMS per channel; if resistive loads are 4 Ohms the outputs amplitude from amplifier will be 20V RMS
22. Under these conditions the consumption current from the source power supply shall be 36.6A maximum; this correlates to a 10% loss for each channel and a 20% loss of the IRAUDPS1; this is the power output and efficiency test
23. The output voltages from +B and –B should be +/- 30V ±2.5V
24. Monitor the transformer waveform; it should be like Fig 14 below
25. The ripple current for +B or –B should be 3V P.P. maximum as shown on Fig 15 below

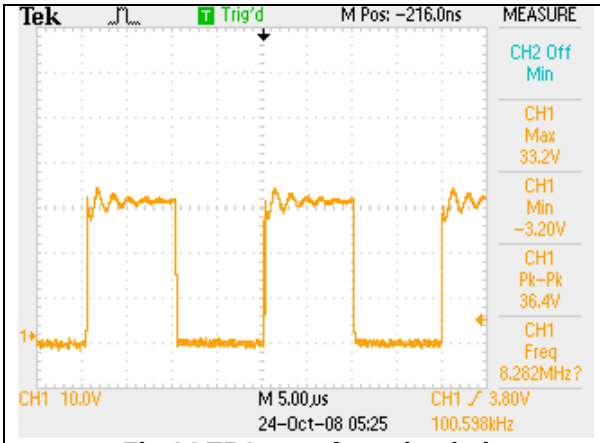

Fig 14 TR1 waveform loaded

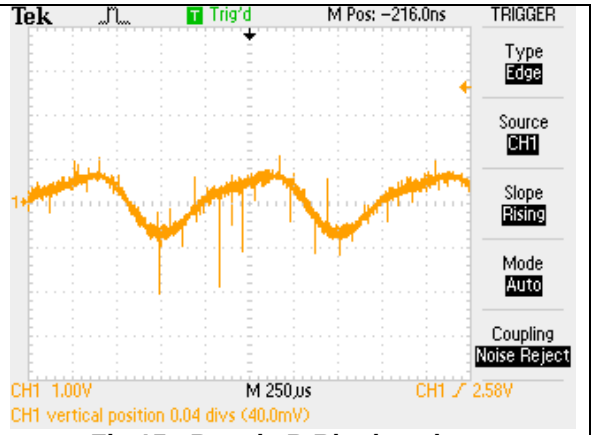

Fig 15 +B and –B Ripple voltage

OTP Test

26. Leave the class D amp running with 100W x 4 continuous power until IRAUDPS1 gets hot and trips the shut down level while the temperature on the heat sink is monitored next to the Thermistor sensor. The temperature for shutdown will be 90C +/-5C and the time required to make OTP will be around 30 minutes when tested at ambient temperature
27. The thermal hysteresis shall be 10C and the time to recover it shall be one minute, the time to make shutdown again will be 10 minutes
28. Load Regulation and Efficiency are shown in Fig 16-20 below

Typical Performance

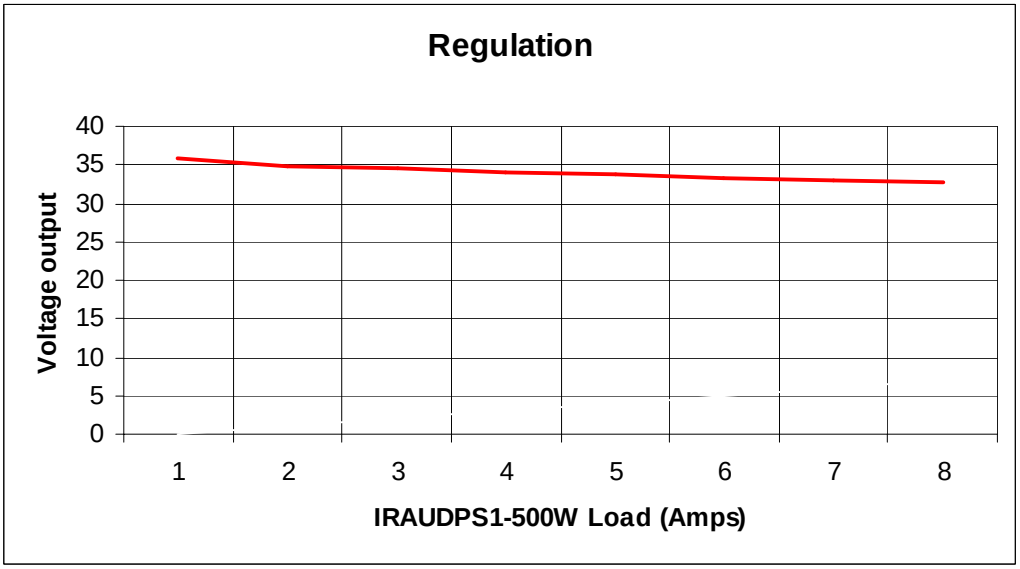

Fig 16

.

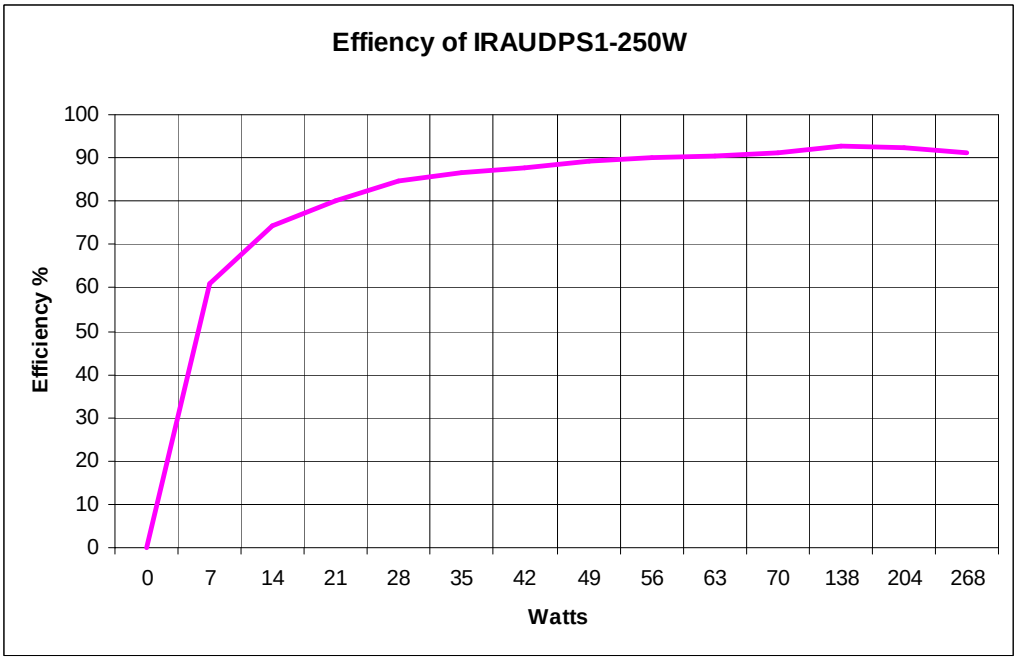

Fig 17

.

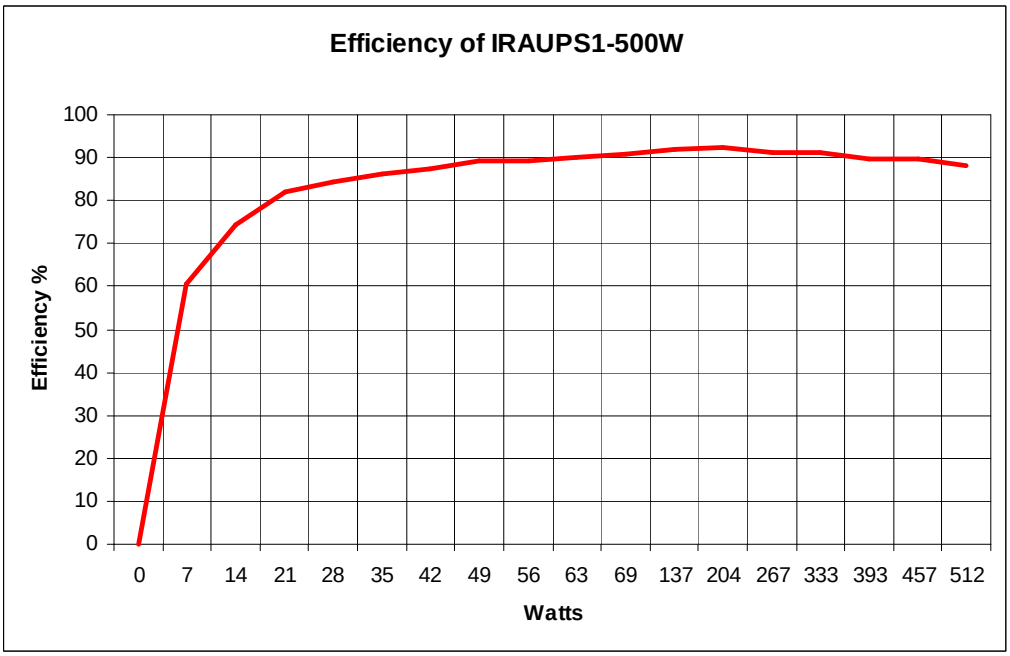
Efficiency of IRAUPS1-500W
Efficiency %
100
90
80
70
60
50
40
30
20
10
0
0 7 14 21 28 35 42 49 56 63 69 137 204 267 333 393 457 512
Watts

Fig 18

.

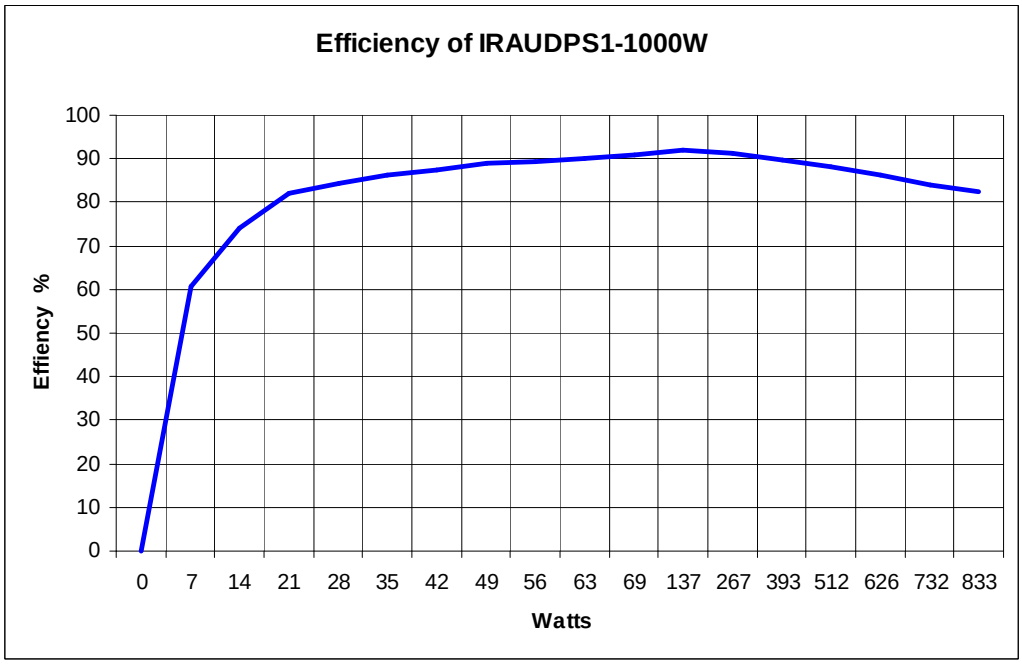
Efficiency of IRAUDPS1-1000W
Effiency %
100
90
80
70
60
50
40
30
20
10
0
0 7 14 21 28 35 42 49 56 63 69 137 267 393 512 626 732 833
Watts

Fig 19

.

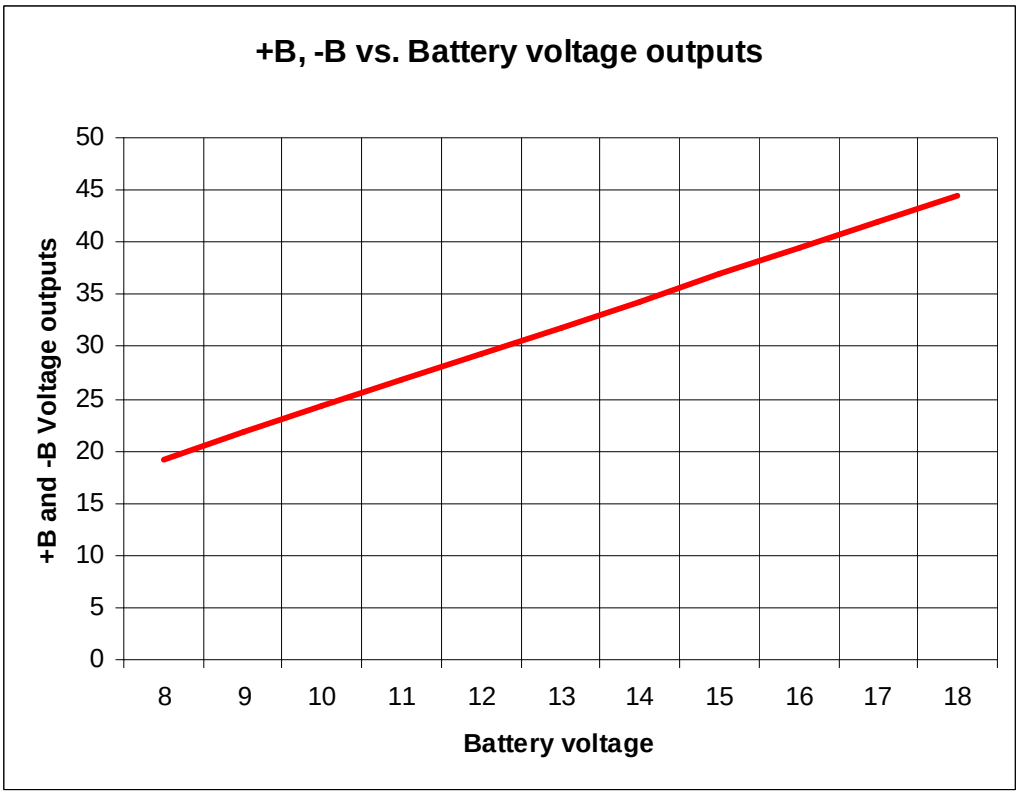
+B, -B vs. Battery voltage outputs
+B and -B Voltage outputs
50
45
40
35
30
25
20
15
10
5
0
8
9
10
11
12
13
14
15
16
17
18
Battery voltage

Fig 20

.
.

IRAUDPS1 Fabrication Drawings

Mechanical assembly

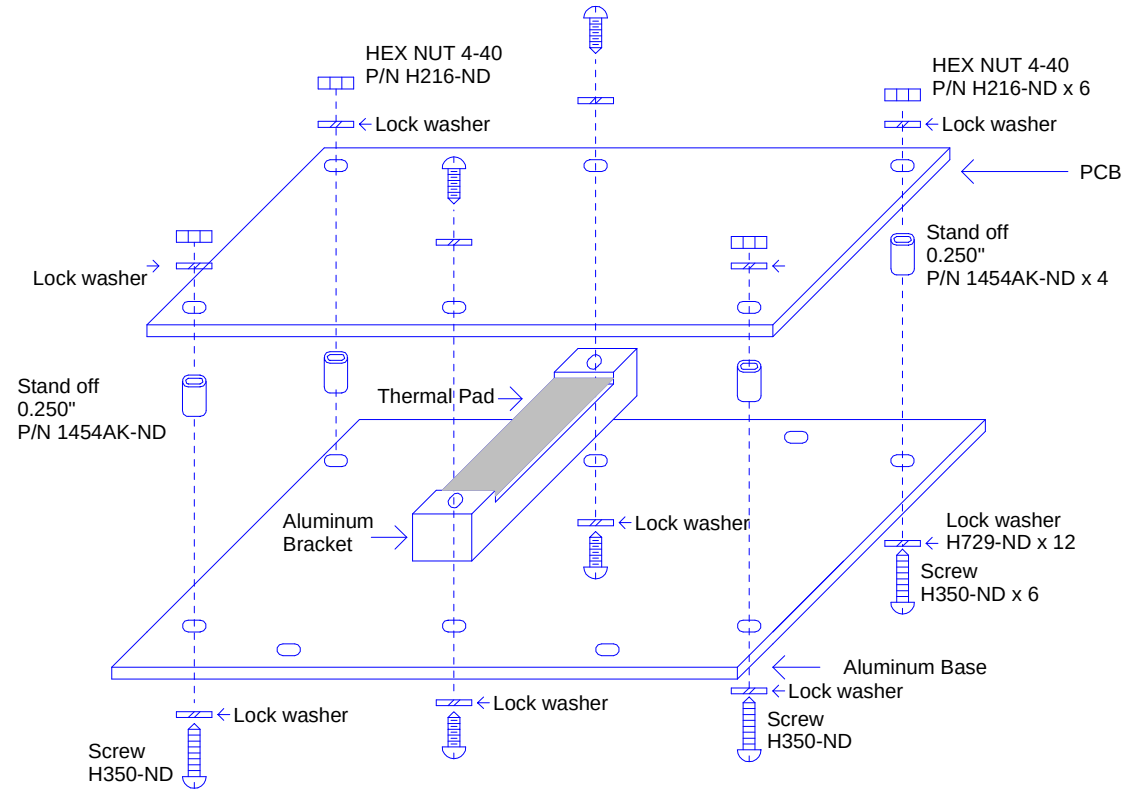

Fig 22 Mechanical assembly

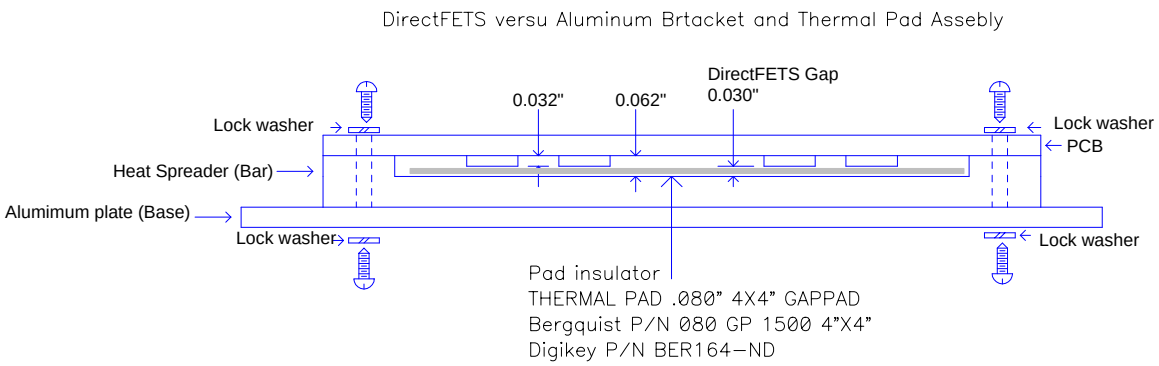

Fig 23 Direct FET thermal dissipation

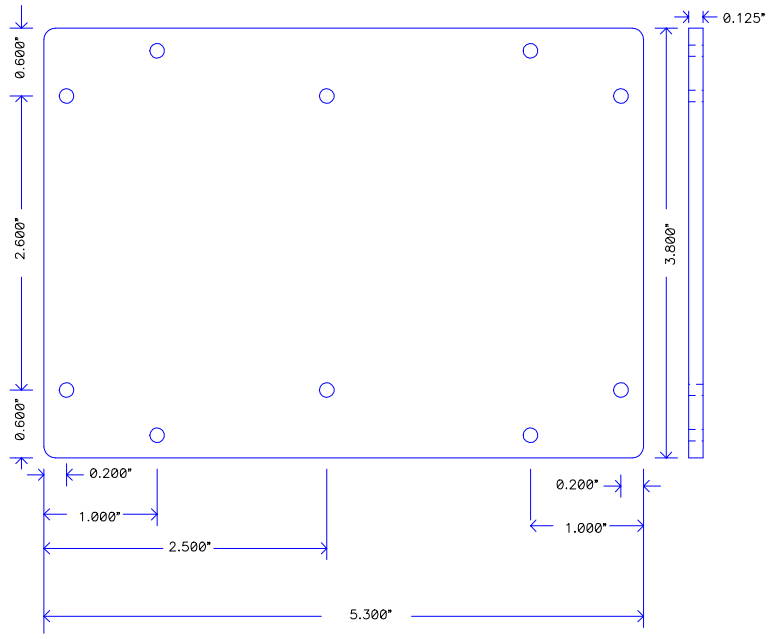

Fig 24 Aluminum base

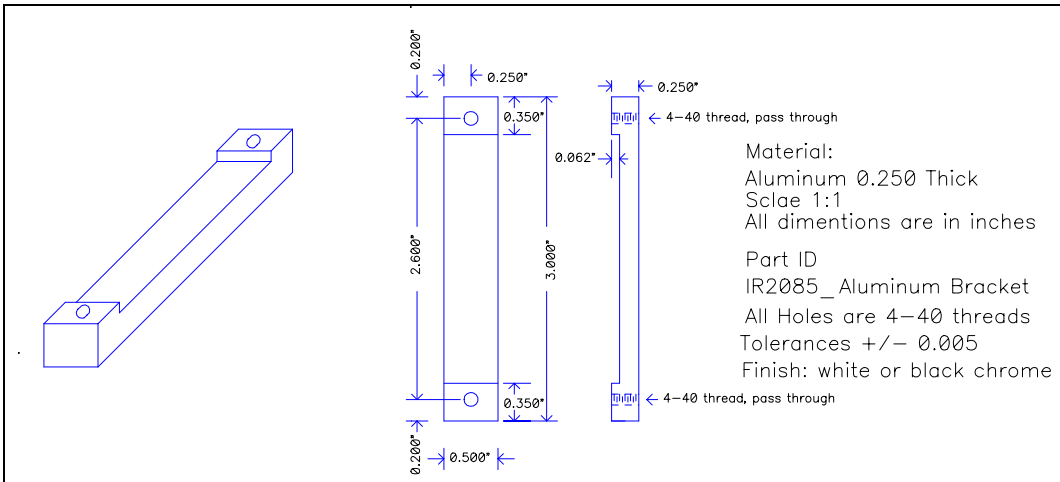

Fig 25 Heat Spreader for DirectFETs

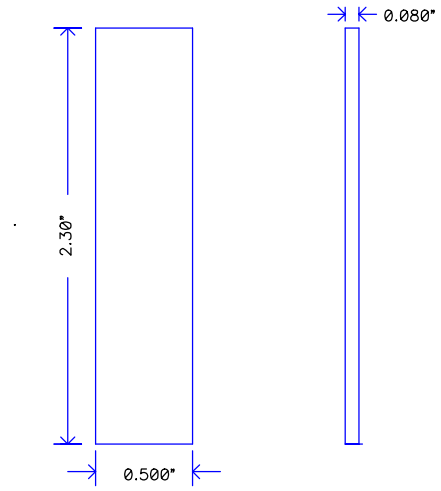

Material:
THERMAL PAD .080" 4X4" GAPPAD
Bergquist P/N 080 GP 1500 4"X4"
Digikey P/N BER164-ND

Sclae none
All dimentions are in inches
Part ID
IR2085_Thermal Pad
Tolerances +/- 0.01

Fig 26 Thermal Pad

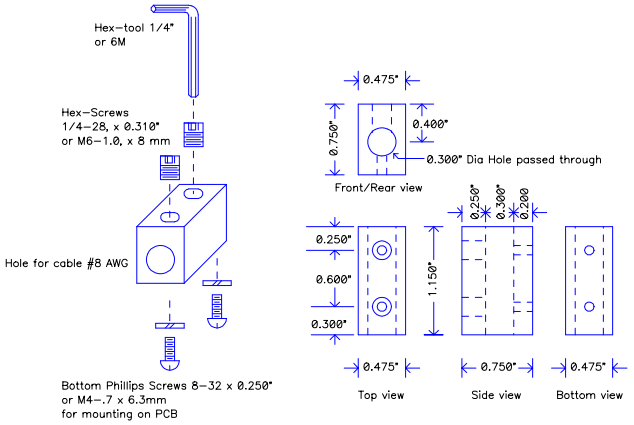

Sclae 1:1

Material: Aluminum

All dimentions are in inches

Part ID
IR2085_Battery terminals
Top holes are 1/4-28 " threaded or 6M-1.0
Bottom holes are 8-32 threads x 0.250" or 4M-.7
Finish: Gold-Flash or white chrome
including srew sets

Tolerances +/- 0.005

Fig 27 Input Battery Terminals

IRAUDPS1 transformer winding instructions

IR Assy P/N IR-TR500-2085-500W

Schematic	Materials required
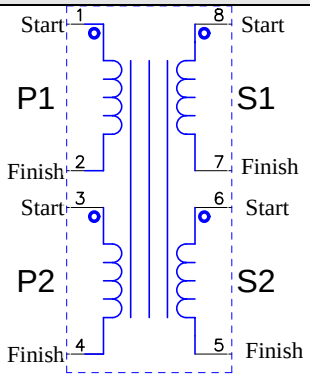 Fig 28	Core: Magnetics material "P" ZP42915TC 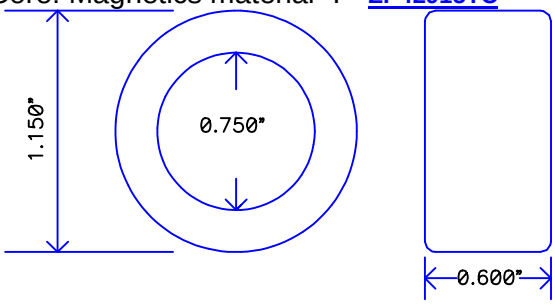 Fig 29

.

	Step No. 1
 Fig No. 30	**Winding P1:** 1. Cut 30cm length of 1.0mm gage x 4 wires of magnet wire (AWG 18) 2. Start winding P1 at 0 degrees forward or Clock wise, as shown on Fig 30, start is the top side, and finish is the bottom side 3. Wind 4 turns in parallel at the same time, evenly spaced around the core as shown on Fig 30 4. Leave 4 cm of wire at both ends, spaced ½ inch between ends, as shown on Fig 30

.

	Step No. 2
 Fig No. 31	**Winding P2:** 5. Cut 30cm of 1.0mm gage x 4 wires of magnet wire (AWG 18) 6. Start winding P2 starting on the end of P1, as shown in Fig 31, start is the top side, and finish is the bottom side 7. Wind the 4 at the same time between the spaces of P1 evenly spaced around the core, in the same direction as shown on Fig 31 8. Leave 4 cm of wire at both ends, spaced ½ inch between ends, as shown on Fig 31

.

	Step No. 3
 **Fig No. 32**	**Winding S1:** 9. Cut 60cm of 20 AWG (0.86mm) x 3 magnet wires 10. Start winding of S1 at 90 degrees forward respect to the start point of P1, as shown on Fig 32, start is the top side, and finish is the bottom side 11. Wind 10 turns whit the three parallel wires at the same time, evenly spaced around the core on same direction as shown on Fig 32 12. Leave 4 cm of wire at both ends.

.

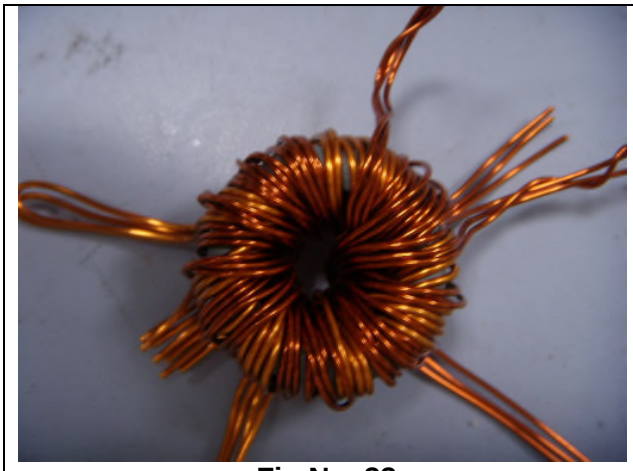 **Fig No. 33**	**Winding S2:** 13. Cut 60cm of 20 AWG (0.86mm) x 3 magnet wires 14. Start winding of S1 at 90 the end pf S1 forward respect to the start point of S1, as shown on Fig 33 15. Wind 10 turns whit the three parallel wires at the same time, evenly spaced around the core on same direction as shown on Fig 33 16. Leave 4 cm of wire at both ends.

.

Step No. 5 Performing “Start and Finish wires”	
Mounting holes; using an IR2085_MB_R2 PCB, perform the next instruction:	
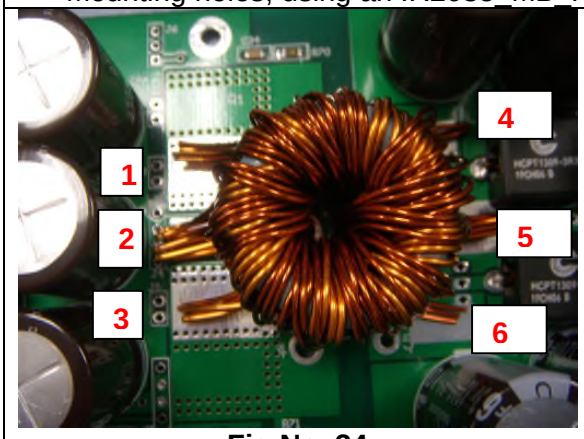 **Fig No. 34**	17. Perform “P1 Start” to fit into Pad 1 as shown Fig 6. 18. Perform “P1 finish” and “P2 Sstart” to be fitted into pad 2 as shown on Fig No. 34, this is the center tap of the Primary side 19. Perform “P2 finish”, to be fitted into mounting hole 3 as shown in fig No. 6. 20. Perform “S1 start” (top winding) to be connected on Pad 4 as shown on Fig 34 21. Perform “S1 finish” wire (bottom winding) to be connected at Pad 5, this is the center tap of the secondary side 22. Perform “S2 start (top winding) to the



Fig 35

center tap on Pad 5

23. Perform “S2 finish” of (bottom winding) to be connected to hole 6 as shown on fig 35
24. Cut and strip magnet wires for ½ inches long to be performed as surface mounting as shown on Fig 35
25. Thin the transformer terminals as shown on Fig 36
26. Before mounting on PCB measure inductance according to next Table 8



Fig 36

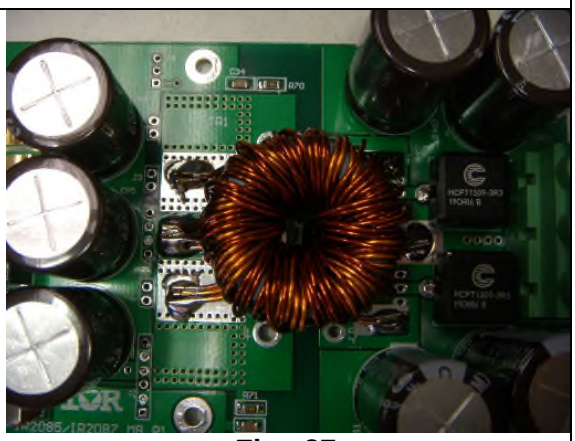

Fig. 37

.

Table 8 **Transformer’s Electrical Characteristics**	
Inductance at P1 and P2 on terminals 1,2 and 2,4	65uH-75uH
Inductance difference between windings P1 and P2	1uH maximum
Inductance at S1 and S2 on terminals 5,7 and 7,8	470uH minimum
Inductance difference between windings S1 and S2	2uH maximum
DCR at P1 winding 1,2 and P2 winding 2,4	3.0mOhms max
DCR at S1 terminals 5,6 and S2 terminals 7,8	46mOhms max
Number of turns for P1 and P2	4 Turns 18 AWG x 4
Number of turns for S2 and S2	10 Turns 20 AWG x 3
Leakage Inductance, with S1 and S2 shorted	1uH max
Resistance between Primary and Secondary (P and S windings)	Infinite
Resistance between any winding and core	Infinite
High-Pot between primary and secondary windings	500VAC
High-Pot between any winding and core	500VAC
Dimensions	1.4” OD x 0.80” Height
Mounting	See Fig 37

.

Design Example

Assume the following customer specifications are required:
A 12V system automotive power supply to drive a stereo class D amplifier 300 Watts per channel into 4 ohms, and the maximum standby power consumption of the power supply should be 5 watts at 14V battery voltage with no load; also efficiency should be greater than 80%, compact design size 3 inches wide, 5 ½ long and 1 ½ high

Voltages outputs required

The first step is to calculate the output voltages and the input and output currents; the control circuits in the IRAUDPS1 are a good reference design to design the whole control system

+B and –B are calculated as following:
AUDIO signal VRMS = Sqrt (300W X 4 Ohms) = **34.6VRMS**
Thus, +B = 34.6 x 1.4142 = **+50VDC** and –B = **-50VDC**

Input Current required from Battery

Input Current Loaded = 300W x 2 = 600W
If efficiency of the Class D amp is 90% then 600 x 1.1 = 660W
If the efficiency of the power supply is 80% then 660W x 1.2 = 792W = 800W
Thus, I loaded = 800W / 14V = **57A**

Output Current provided

Total output current = 660W / 50V = 13.2A
Thus +B = 13.2 / 2 = **6.6A** and –B = **-6.6A**

Transformer Design Example

The transformer design is a trade-off between size, operating frequency, physical windings to achieve low leakage inductance, form factor, primary turns ratio to meet standby input current, and type of core material

Core Selection

Core must be selected as power material composite and it can be chosen from any major manufacturers which are Magnetics Inc, TDK, Ferroxcube, Siemens or Thomson.

Each manufacturer has a number of different powder core mixes of various materials to achieve different advantages, so in this case Magnetics Inc core ZP42915TC is selected according the estimated size required to fit the power required

Notice on IRADUPS1 Fig 30 and Fig 31 the primary windings are 4 turns and they are distributed equally and spaced around the core in order to provide uniform magnetic flux density therefore low leakage inductance, so 4 turns on primary side is a good practice for now because it fits most of the requirements mentioned above, of which the most important factor here is size and physical windings to achieve low leakage inductance and core material

Primary inductance

Primary Inductance called here as Lp is 65uH that belongs to 4 turns according to Magnetics ZP42915TC permeability data sheet

Magnetizing current

The standby current with no load depends on the magnetizing idle of the power transformer called here as $\mathbf{I_M}$ and it depends on the operating switching frequency called here as Fs

Magnetizing current = $\mathbf{I_M}$ = 5W of standby current / 14V = 0.35A

Therefore this is the transformer's primary windings impedance current

Thus, Transformer magnetizing impedance = $\mathbf{Z_M}$ = 14V / 0.35A = 40 ohms

Then we assume that Z_M is the same impedance of XL where XL = 6.28 x Lp x Fs

Therefore switching frequency = Fs = XL / (Lp x 6.28)

Operating switching frequency calculation

Because this is a push-pull DC-DC converter, switching frequency is calculated as follows:

Operating switching frequency = Fs = ½ (XL / (Lp x 6.28) = 1 / 2 (6.28 x 65uH) / 40 ohms = 48.9 kHz

Therefore we will use **50 kHz**

Verification of the computations:

Transformer primary windings Impedance = XL = 6.28 x 65uH x 50 kHz = 20.41 ohms

I_M = ½ (V / XL) = ½ (14V / 20.41) = 0.34A

Thus, the standby current will be 0.34A at 14V = **4.9W** which will meet the customer's specifications

Turns ratio calculations

If the primary windings are 4 turns and they are distributed equally spaced around the core as shown on Fig 30 and Fig 31

Thus, Volts per turn ratio = 14V / 4 turns = 3.5V per turn
Turns required on secondary = 50V / 3.5V = **14 turns**

Number of wires and gauge required

Primary Windings

Because the input current will be 57A, the wire's gauge will be the biggest possible to fit into the core with the lowest DCR possible for a maximum efficiency and lower temperature dissipation

Assuming 5 watts DC power dissipation on the primary side, then Primary DCR maximum required = 5W / $(57)^2$ = 5 / 3249 = 0.0015 ohms

Wire length required is 6 inches for 4 turns in this case in particular for Magnetics Core ZP42915TC, Then considering copper DC resistance according to gauge table 9 below Thus, a single # 14 AWG magnet wire is required considering only the DC resistance (DCR), but considering the skin effect of the high frequency of operation which in this case will be 50 kHz, therefore 5 wires in parallel # 18 are required in order to minimize the skin effect and therefore minimize the AC resistance at 50 kHz

.

Table 9
Round copper magnet wire DCR and AC/DC Resistance ratio due to skin effect versus frequency

			25kHz		50 kHz		100kHz	
AWG #	Diameter mils	DCR per 1ft m **Ω**	Skin depth ratio	Rac / Rdc	Skin depth ratio	Rac / Rdc	Skin depth ratio	Rac / Rdc
12	81.6	1.59	4.56	1.45	6.43	1.85	9.10	2.55
14	64.7	2.52	3.61	1.30	5.09	1.54	7.21	2.00
16	51.3	4.02	2.87	1.10	4.04	1.25	4.54	1.40
18	40.7	6.39	2.27	1.05	3.20	1.15	4.54	1.40
20	32.3	10.1	1.80	1.00	2.54	1.05	3.6	1.25
22	25.6	16.2	1.48	1.00	2.02	1.00	2.85	1.10
24	20.3	25.7	1.13	1.00	1.60	1.00	2.26	1.04
26	16.1	41.0	0.90	1.00	1.27	1.00	1.79	1.00

.

Secondary Windings

Because the secondary current is only 6.6A, lets assume a power dissipation of 2W on the secondary windings

Secondary DCR maximum rewired = 2 / $(6.6)^2$ = 0.045 ohms

Thus, 3 wires # 20 required from table 9

MOSFTS Selection

Because part of the customer specification has to be a compact design, the Direct FET IRF6648 is selected due to small package, high current capability, 60V_{DS}, low RDS_{ON} and low Qg feature

Quantity of MOSFETS required

Since the input current at full load will be 57 amperes, and operating frequency is 50 kHz with 50% duty cycle (10us turn ON) and according to IRF6648 data sheet the safe operating area (Fig 12 from data sheet)

Therefore, 15A will be the adequate current to be into the SOA

Number of devices = 57A / 15A = 3.8 devices

Thus, 4 devices required per each side of the Push-Pull transformer

Gate Drive Current required

The Peak Gate drive current from IRS2085 = (V_{CC} / R_{GATE}) x 2 outputs = (10V/ 22 ohms) x 2 = 0.9A

The average current required to drive each gate depends on the switching frequency and Qg of the selected MOSFET, which in this case Qg is 50nC (nano-coulombs) from data sheet, there are two FETS in parallel per gate drive.

Average Gate Current = I_{GATE} = 2Qg x Fs = 2 x 50E-9 x 50kHz = 5mA
Total Average Gate Current required = 0.005A x 4 devices = 0.02A

MOFETS Power Dissipation losses

The power dissipation at DC can be calculated as following:
57A / 4 devices = 14.25A
DC Power dissipation per device = I^2 x RDS_{ON} / 2
Note RDS_{ON} at 100C from Data sheet Fig 5, is divided by 2 because it is 50% duty cycle
Power dissipation per device = $(14.25)^2$ x 7.5mOhms / 2 = 0.76W
Total power dissipation = $(57)^2$ x ¼ 7.5 mOhms = 3249 x 1.875 = **6.091 watts**

MOSFET Switching loses

The MOSFETS switching losses can be calculated as following:
Switching losses = Turn ON_{LOSSES} + Turn OFF_{LOSSES} + Gate Drive $_{LOSSES}$

From IRF6648 data sheet $T_{(RISE\ TIME)}$ = 29nS and $T_{(FALL\ TIME)}$ = 13nS and Q_{GD} = 14nC

Losses contributed by the size of the gate series resistor

Gate drive series resistors actually slowdown the turn ON and turn OFF timing
(See Fig 2, R18-R21)

Delay losses contributed by the gate series resistor = $G_{RES\ Delay}$ = Q_{GD} / ((V_{CC} – V_{ML})/ R_{GATE})). V_{ML} is the miller effect plateau voltage of gate charge curve. It is 5.5V for IRF6648.

$G_{RES\ Delay}$ = 14E-9 / ((10V-5.5V) / 22 ohms) = 14E-9 / 0.2A = **70nS**

The delay time that caused by large gate resistor is much longer than the rise time that defined in IRF6648 datasheet. Thus gate resistor delay time will be used to calculate MOSFET switching losses.

Turn ON_{LOSSES} = F_{OSC} x ½ x ($G_{RES\ Delay}$) x I x $2V_{DS}$ = 50kHz x 0.5 x 70nS x 14.25A x 28V = 0.7 watts per device

Total Turn ON losses = 0.7 x 8 = **5.6W**

Note: V_{DS} is multiplied by 2 because V_{DS} occurs twice in Push-Pull converters

Turn OFF_{LOSSES} = F_{OSC} x ½ ($G_{RES\ Delay}$) x I x $2V_{DS}$ = 50kHz x 0.5 x 70nS x 14.25A x 28V = 0.70 watts per device

Total Turn ON losses = 0.70 x 8 = **5.6W**

Gate losses = Qg x V_{GATE} x F_{OSC}

Qg from IRF6648 data sheet is 36nC typical

Gate losses = 36E-9 x 10 x 50khz = 0.018W per FET

Total Gate losses = 0.018W x 8 = **0.144W**

Total switching losses = 5.6 + 5.6 + 0.144 = **11.34W**

Output Rectifiers Losses

+DC rectifier losses = $V_{(DIODE)}$ x $I_{(OUT)}$ = 0.7V x 6.6A = 4.62W per diode
Total Diode rectifiers for +B and –B = 4.62 x 4 = 18.48 watts

Efficiency

Total losses then will be; Transformer losses + MOSFETS losses + switching losses + output rectifiers losses + core losses

Core losses according to material P from Magnetics-Inc data sheet is 2 watts at 50 kHz

Total transformer losses = Primary winding loses + Secondary winding losses + Core Losses 5W +2W + 2W +2 W = 11 watts

Total MOSFET losses = RDS_{ON} losses + Switching losses = 6.09W + 11.34W = **17.43W**

Overall Losses = 11W + 17.43W + 18.48W = **46.91W**

Efficiency = 600 / 600+ 46.91 = **92.74%** Therefore meet the efficiency specification

Frequency of oscillation

From Fig 2, the frequency of oscillation is managed by R1 and C2 values and it shall be calculated by the equation below

F_{OSC} = 1 / R1 x C2 = 50 kHz

Thus, at 50Khz if R1 is 30k, then C2 will be 470pF, said values as shown on schematic Fig 2 (See IR2085 data sheet for more details)

Selecting Dead-time

Dead time selection depends on the turn ON and OFF delay of the power MOSFETS selected, in this case IRF6648 data sheet shows 16nS for turn ON delay and 28nS for turn OFF delay, rise time 29nS and fall time 13nS,

Therefore dead time required = 16nS + 28nS + 29nS + 13nS = 86nS per phase

Because this is a push-pull then 86nS are multiplied by two giving **172nS**

Thus, dead time can be programmed according to the 2085 datasheet where dead time values are the relationship weight of C versus R.

Therefore, Fig 2 **30K ohms** and **470pF** gives 170nS of dead time

Over-Temperature Protection (OTP)

Thermistor is selected to get 8.2 k ohms at 90°C, it can be readjusted changing R16 or R15 and R17 for any other temperature

Over Current Protection (OCP)

From Fig3; R47, R48, R49 and R54 can be calculated at any current protection desired by the following equation:

OCP resistor = 0.6V / OCP current

Example: If OCP desired is 20A

Then R_{OCP} = 0.6V / 20A = 0.03 ohms

Thus, R47, R48, R49 and R54 will be 0.06 ohms each one because two of them are in parallel

BJT gate driver option

Notice on schematic Fig 2 and their PCB layout that it is prepared for extra BJT drivers Q3-Q6 that in this case they are not populated, this is in case that the customer wants more than 4 MOSFETS in parallel for large power outputs applications

Music Load

NOTE, All previous calculations were made for continuous sine wave load for the safe and reliable design; the average currents and power dissipations actually will be 1/8 of power for soft music, ¼ of power for heavy rock music and 3/8 of power with dead metal music, and ½ of rated power for subwoofer amplifiers

Music load Input current calculations

RMS Input current with constant sine wave outputs at 1 kHz all channels driven:

- $I_{RMS\ SINE\ WAVE}$ = 14V/800W = 57A
- $I_{PEAK\ MUSIC}$ = 57 x 1.4142 = 80A
- $I_{SOFT\ MUSIC}$ = 57A x 1/8 = 7.1A
- $I_{ROCK\ MUSIC}$ = 57 x ¼ = 14.2A
- $I_{HEAVY\ METAL\ MUSIC}$ = 57A x 5/8 = 21.3A
- $I_{Subwoofer}$ = 57A x ½ =28A

Revision changes descriptions

Revision	Changes description	Date
IRAUDPS1_R3	Released	January 23, 2009
IRAUDPS1_R3.1	Reviewed	March 24, 2009
IRAUDPS1_R3.2	Tables 1, 2, 5, 7 Revised for 500W	April 22, 2009
IRAUDPS1_R3.3	Page 30, 50 khz with 50% duty cycle (10us turn ON) Page 30, number of devices 57A/15A Page 31-32, corrected gate drive current calculation. Corrected power dissipation loss calculation numbers. Corrected MOSFET switching loss calculation. Corrected efficiency number according to new power losses data. Page 33, corrected typo of dead-time, ns	Feb 21, 2013