PRODUCT BRIEF

XDPP1188-200C

XDP™ Digital Power Controller with 8-PWM outputs for DC-DC conversions

The XDPP1188-200C is the new member of Infineon's feature-rich XDP™ Digital Power Controller XDPP11xx product family ideal for isolated and non-isolated modern high-density, high-power systems deployed in AI servers, 48 V server motherboards, HV IBC for ±400 V and 800 V datacenter, telecom infrastructure, and industrial 4.0 applications.

It combines many features of XDPP1140, such as a low-latency state machine-based digital control loop with associated firmware, a high-performance AFE for current and voltage sensing and feedback, Power Management Bus (PMBus® 1.3) interface for system communication, and an Arm® Cortex®-M0 sub-system for housekeeping integrated in a single chip. The built-in non-volatile memory provides extensive programming and customization of functions such as frequency dithering, GPIO signal timing, user defined blackbox data recording, soft start timing and sequencing, and feature rich protection response.

Specifically, XDPP1188-200C is offered in a 5mm x 5mm 40-pin VQFN package with a 0.4 mm pitch and incorporates one 4-channel general purpose ADC, two voltage ADCs and two current ADCs, making it ideal for complex applications where a comprehensive control capability is required. Furthermore, 8 DPWM outputs are provided to support up to 2-phase power conversion and enables system designers to implement a wide range of power conversion topologies and configurations with a single Digital Power Controller.

Digital Power Controller portfolio

P/N	PWM Outputs	V-ADC	I-ADC	Package
XDPP1100-Q024	6	2	1	VQFN-24 4x4
XDPP1100-Q040	12	3	2	VQFN-40 6x6
XDPP1140-100B	6	2	1	VQFN-24 4x4
XDPP1140-100C*	6	2	1	VQFN-24 4x4
XDPP1148-100B	6	1	2	VQFN-24 4x4
XDPP1148-100C*	6	1	2	VQFN-24 4x4
XDPP1188-200C	**8**	**2**	**2**	**VQFN-40 5x5**

** The -100C version is coming soon and supports burst mode of bridge topologies and improves the active current sharing performance.*

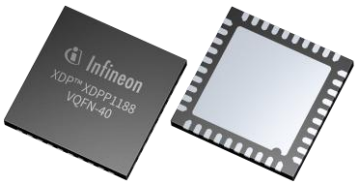

Key features

- ARM® Cortex®-M0 core
- 2 current & 2 voltage sense ADCs (100 MHz)
- 4 General Purpose ADC channels
- Up to 8 high-resolution PWM outputs (78.125 ps)
- Frequency modulation and pulse-width modulation
- Active current sharing
- Hardware-based feed-forward
- Hardware-based burst mode and phase shedding
- Current sense with high tracking slew rate
- Fast GPIO input
- SPI/UART/PMBus® interface
- Built-in non-volatile memory
- VQFN-40 5x5, 0.4mm pitch

Key benefits

- Allows FW-based customization
- Accurate V/I/Temperature monitoring
- Pre-programmed control providing fast time-to-market
- Pre-bias startup with SR or DE mode
- Parallel modules for scalable power
- Compliance with industry standards

Artificial intelligence · Server · Telecom · Smart factory

www.infineon.com

Supported topologies

XDPP1188-200C is designed to deliver excellent digital control for resonant LLC topologies, including half-bridge (HB) LLC, full-bridge (FB) LLC, phase-shift full-bridge (PSFB) LLC. It also supports all the major fixed frequency topologies such as pulse width modulation (PWM) HB, PWM FB, PWM PSFB, active clamp forward (ACF), non-isolated Buck, Boost, and Buck-boost as well as the interleaved operation of Buck, Boost, and Buck-Boost.

Interleaved FB-FB

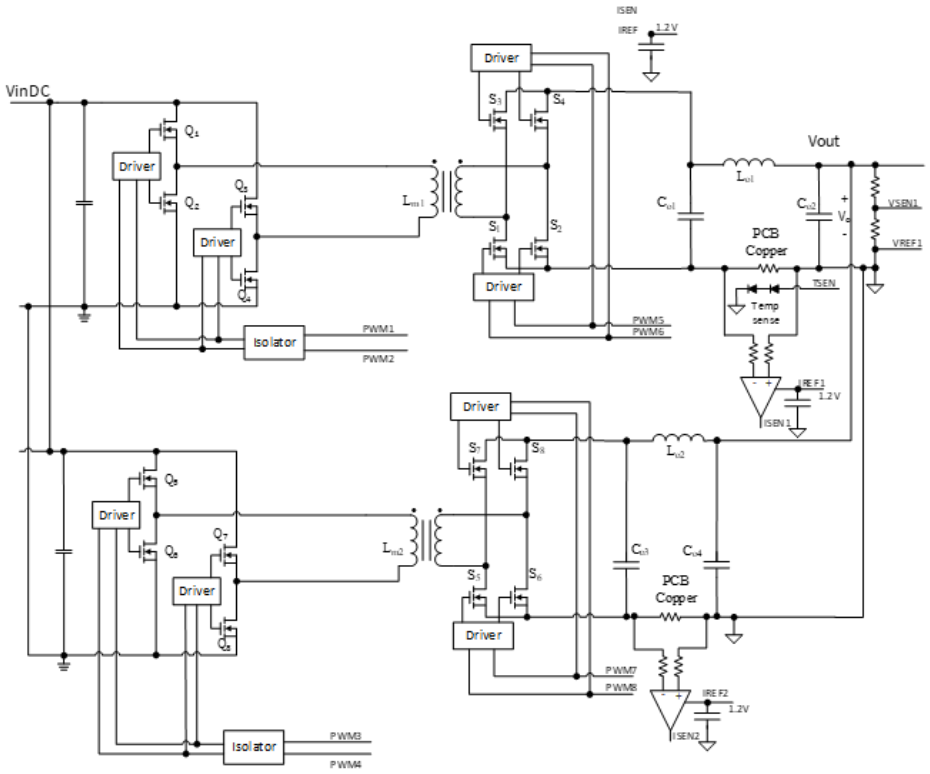

Published by
Infineon Technologies AG
Am Campeon 1-15, 85579 Neubiberg
Germany

© 2025 Infineon Technologies AG
All rights reserved.

Public

Version: V1.0_EN
Date: 03/2026

Please note!
This Document is for information purposes only and any information given herein shall in no event be
regarded as a warranty, guarantee or description of any functionality, conditions and/or quality of our products or any suitability for a particular purpose. With regard to the technical specifications of our products, we kindly ask you to refer to the relevant product data sheets provided by us. Our customers and their technical departments are required to evaluate the suitability of our products for the intended application.

We reserve the right to change this document and/or the information given herein at any time.

Additional information
For further information on technologies, our products, the application of our products, delivery terms and conditions and/or prices, please contact your nearest Infineon Technologies office (www.infineon.com).

Warnings
Due to technical requirements, our products may contain dangerous substances. For information on the types in question, please contact your nearest Infineon Technologies office.

Except as otherwise explicitly approved by us in a written document signed by authorized representatives of Infineon Technologies, our products may not be used in any life-endangering applications, including but not limited to medical, nuclear, military, life-critical or any other applications where a failure of the product or any consequences of the use thereof can result in personal injury.

Scan QR code and explore offering
www.infineon.com