PRODUCT BRIEF

XDPP114x-100B/C*

XDP™ Digital Power Controller with 6-PWM outputs for DC-DC conversions

The XDPP1140 and XDPP1148 are 6-PWM controllers of Infineon's feature-rich XDP™ Digital Power Controller XDPP11xx product family. They are highly programmable and versatile devices with advanced features that make them an ideal power controller for isolated and non-isolated modern high-density, high-power systems deployed in AI servers, 48 V server motherboards, HV IBC for ±400 V and 800 V datacenter, telecom infrastructure, and industrial 4.0 applications.

A combination of low-latency state machine-based digital control loop with associated firmware, high-performance AFE for current and voltage sensing and feedback, Power Management Bus (PMBus® 1.3) interface for system communication, and an Arm® Cortex®-M0 sub-system for housekeeping integrated in a single chip, supplemented by Graphical User Interface (GUI) and eval board enables a DC-DC power design platform for targeted applications with fast time-to-market support. A built-in non-volatile memory provides extensive programming and customization of functions such as frequency dithering, GPIO signal timing, user defined blackbox data recording, soft start timing and sequencing, and feature rich protection response.

Both XDPP1140 and XDPP1148 are provided in a 4mm x 4mm 24-pin VQFN package.

Digital Power Controller portfolio

P/N	PWM Outputs	V-ADC	I-ADC	Package
XDPP1100-Q024	6	2	1	VQFN-24 4x4
XDPP1100-Q040	12	3	2	VQFN-40 6x6
XDPP1140-100B	**6**	**2**	**1**	**VQFN-24 4x4**
XDPP1140-100C*	**6**	**2**	**1**	**VQFN-24 4x4**
XDPP1148-100B	**6**	**1**	**2**	**VQFN-24 4x4**
XDPP1148-100C*	**6**	**1**	**2**	**VQFN-24 4x4**
XDPP1188-200C	8	2	2	VQFN-40 5x5

** The -100C version is coming soon and supports burst mode of bridge topologies and improves the active current sharing performance.*



www.infineon.com

Key features

- ARM® Cortex®-M0 core
- High performance current and voltage sense ADCs (100 MHz)
- Low-latency state machine-based digital control loop
- Up to 6 high-resolution PWM outputs (78.125 ps)
- Configurable feedback control
- Frequency modulation
- Active current sharing
- Hardware-based feed-forward
- Hardware-based burst mode and phase shedding
- Current sense with high tracking slew rate
- Fast GPIO input
- SPI/UART/PMBus® interface
- Built-in non-volatile memory
- VQFN-24 4x4 package

Key benefits

- Supports resonant & close loop LLC topologies; hybrid soft-start for LLC
- Supports symmetric input for primary current sense
- Flexible mode: voltage mode, peak current mode, constant current and power
- Configurable offset for secondary current sense
- Allows using external signal to define SR rising or falling edge
- Parallel modules for scalable power

Artificial intelligence · Server · Telecom · Smart factory

Supported topologies

XDPP114x Digital Power Controllers are backward compatible with XDPP1100; however, enhanced features are designed to provide excellent digital control for resonant LLC topologies, including half-bridge (HB) LLC, full-bridge (FB) LLC, and phase-shift full-bridge (PSFB) LLC. XDPP114x also supports all the major fixed frequency topologies such as pulse width modulation (PWM) HB, PWM FB, PWM PSFB, active clamp forward (ACF), non-isolated Buck, Boost, and Buck-boost. In addition, XDPP1148 supports the interleaved operation of Buck, Boost, and Buck-boost.

Application diagram XDPP1140

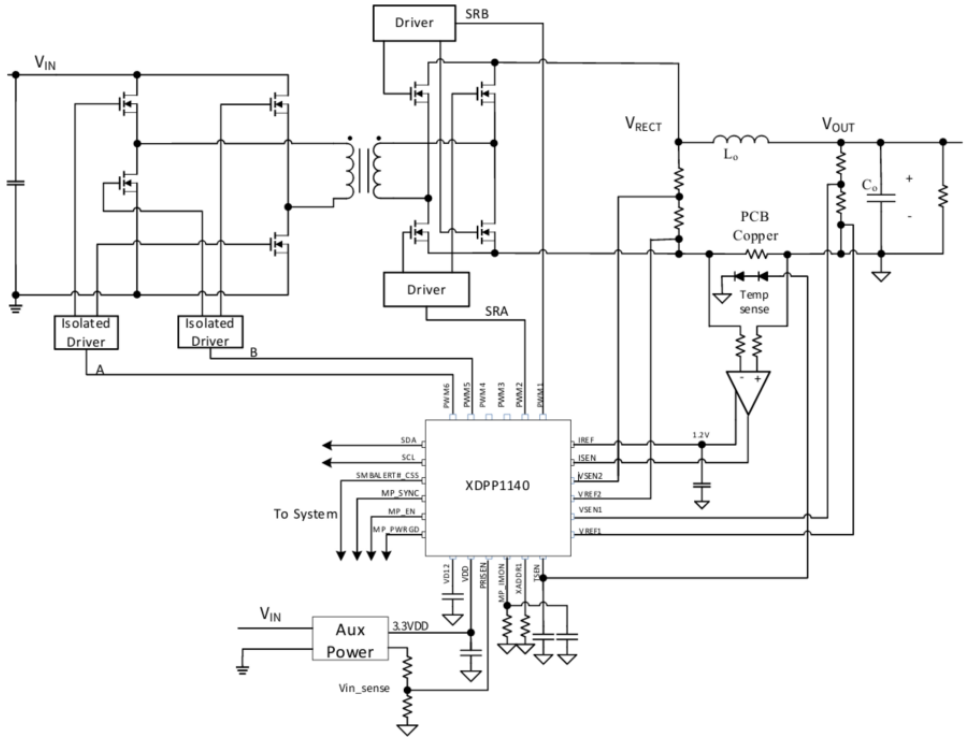

Published by
Infineon Technologies AG
Am Campeon 1-15, 85579 Neubiberg
Germany

© 2025 Infineon Technologies AG
All rights reserved.

Public
Version: V1.0_EN
Date: 11/2025

Important notice
Products are sold or provided and delivered by Infineon Technologies AG and its affiliates ("Infineon") subject to the terms and conditions of the frame supply contract or other written agreement(s) executed by a customer and Infineon or, in the absence of the foregoing, the applicable Sales Conditions of Infineon. General terms and conditions of a customer or deviations from applicable Sales Conditions of Infineon shall only be binding for Infineon if and to the extent Infineon has given its express written consent.

To the fullest extent permissible pursuant to applicable law, with respect to any information given in this document or in any associated documentation, Infineon disclaims all warranties and liabilities of any kind, whether express or implied, including but not limited to any warranties of merchantability, suitability of the products for the intended application or the specific use, or non-infringement of third-party rights.

Subject to the development and release of the products for series supply by Infineon, the technical specifications of the products are set forth in the relevant final datasheet provided by Infineon and, if any, agreed and signed specifications. Infineon's customers are required to evaluate the suitability of the products for the intended application or specific use.

The information given in this document is subject to change by Infineon at any time without notice.

Scan QR code and explore offering
www.infineon.com