PRODUCT BRIEF

# XDP™ digital eFuses

## Integrated hot-swap controller, current sense, and FET optimized for 48 V AI server and data center applications

Infineon's XDP™ digital eFuses integrate a XDP71x hot-swap controller, a low $R_{DS(on)}$ OptiMOS™ FET 30 A or 20 A, and a current sensor in a single package. Available are the compact LIQFN-23 6x5 and LIQFN-42 7x7 packages which support PCB area savings and reduce application footprint. XDP™ eFuses are designed for a wide input voltage range of 7 V up to 80 V, thus are especially suitable for 48 V/54V or lower voltage applications. Through accurate real-time monitoring and reporting of system parameters via PMBus®, XDP™ eFuses detect abnormal operating conditions and respond quickly to prevent damage to the system. While XDP730-001 and XDP720-001 incorporate a PMBus® v1.3 interface at 1 MHz, XDP721-001 and XDP722-001 do not. The XDP™ eFuse family provides analog current reporting for load management as well as Surge Immunity protection along with a multitude of programmable protection features such as (severe) overcurrent, over- and undervoltage, and over temperature protection as well as FET health, VDS and Watchdog protection. Moreover, XDP™ eFuses are stackable, hence enable current sharing to achieve higher output currents.

The digital eFuses are optimized for critical 48 V AI server applications such as base boards, power distribution, server cards, and fan control, and therefore play a crucial role in ensuring the reliability and uptime of these systems. IPC2221B and IPC9592B high-voltage compliance is ensured, making them suitable for HV system designs.

**XDP™ eFuse product portfolio**

| P/N | Current rating | $R_{DS(on)}$ (typ.) | Comm-unication interface | Accuracy | Fault response |
|---|---|---|---|---|---|
| XDP730-001 | 30 A | 1.3 mΩ | PMBus® 1.3 at 1 MHz | V ≤ ± 0.5%<br>I ≤ ± 1%<br>P ≤ ± 2%<br>E ≤ ± 3% | Program. Auto-retry, latch-off |
| XDP720-001 | 20 A | 3.0 mΩ | | | |
| XDP721-001 | | | - | - | Latch-off |
| XDP722-001 | | | - | - | Auto-retry |

**LIQFN-23, 6mm x 5mm**



**LIQFN-42, 7mm x 7mm**



www.infineon.com

## Key features

Integrated digital hot-swap controller, current sensor, and low $R_{DS(on)}$ (**1.3 mΩ** or **3.0 mΩ**) OptiMOS™ FET with up to **30 A** or **20 A** continuous current carrying capability

- Wide $V_{IN}$ range 7 V to 80 V
- Transient withstand up to 100 V for 500 ms
- Input voltage Surge Immunity
- Inrush current protection using digital SOA control with active SOA protection
- "Primary/Standalone" or "Secondary" device operation mode for stacking mult. eFuses
- V/I ADCs: 12-bit resolution
- Active monitoring/reporting: V ≤ ±0.5 %, I ≤ ±1 %, P ≤ ±2%, E ≤ ±3%
- Analog IMON accuracy ≥ ±1%
- Extensive protection features
- LIQFN-23 6x5 or LIQFN-42 7x7

## Key benefits

- Integration for smaller application footprint & reduction in system BOM
- IPC2221B & IPC9592B high-voltage compliant
- Stackable with current sharing to achieve higher output current
- Adjustable current limit for flexibility in design
- Robust design along with debugging

Data Center · Server · Artificial intelligence · Fans, 48V

## Application schematics

### XDP730-001

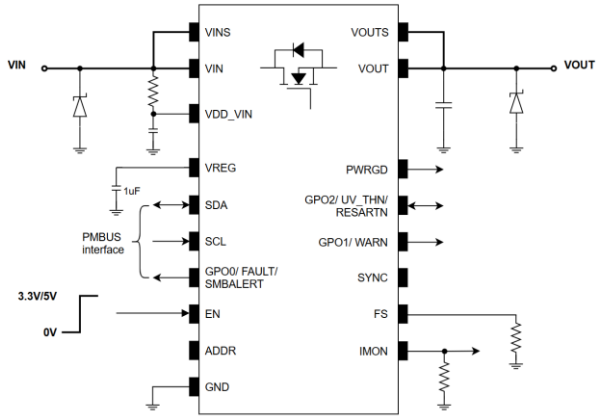


### XDP720-001

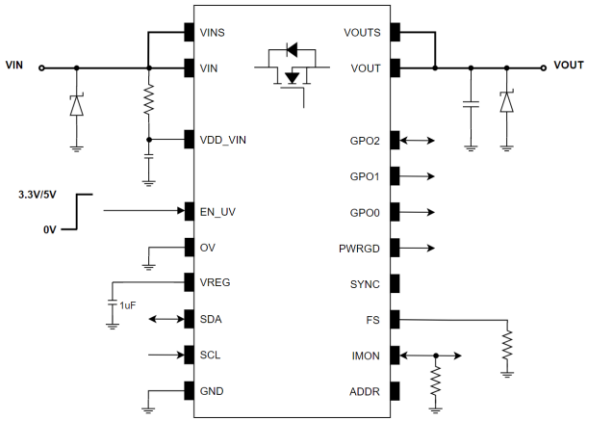


### XDP72x-001

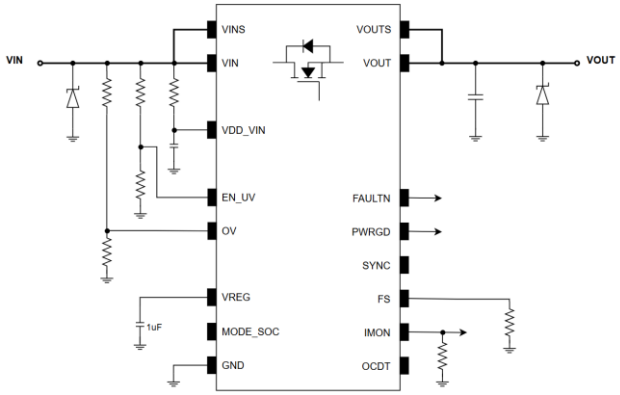


### LIQFN-42, 7mm x 7mm package drawing

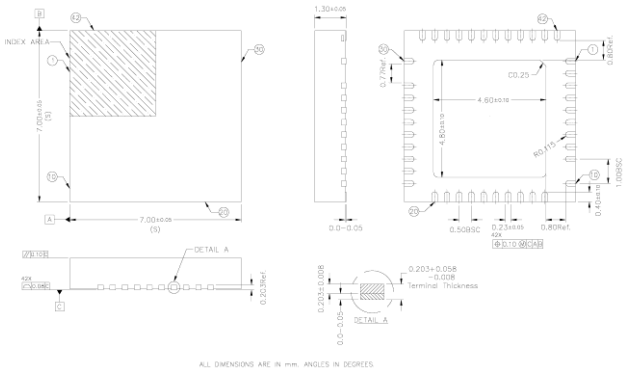


### LIQFN-23 6 mm x 5mm package drawing

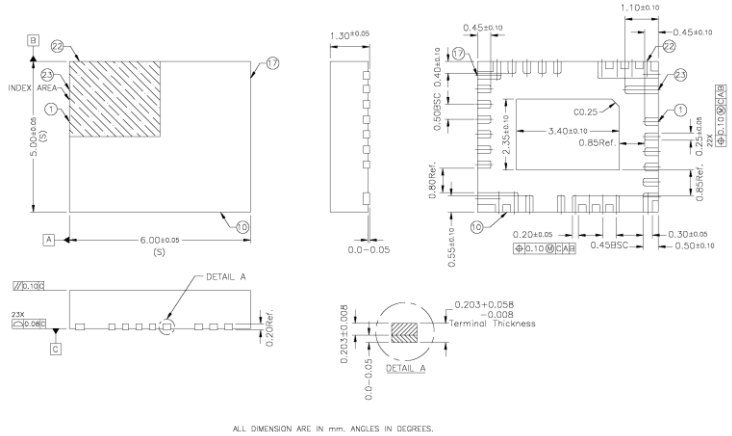


www.infineon.com

Published by
Infineon Technologies AG
Am Campeon 1-15, 85579 Neubiberg
Germany

© 2023 Infineon Technologies AG
All rights reserved.

Public

Date: MM/2023

**Please note!**
This Document is for information purposes only and any information given herein shall in no event be regarded as a warranty, guarantee or description of any functionality, conditions and/or quality of our products or any suitability for a particular purpose. With regard to the technical specifications of our products, we kindly ask you to refer to the relevant product data sheets provided by us. Our customers and their technical departments are required to evaluate the suitability of our products for the intended application.

We reserve the right to change this document and/or the information given herein at any time.

**Additional information**
For further information on technologies, our products, the application of our products, delivery terms and conditions and/or prices, please contact your nearest Infineon Technologies office (www.infineon.com).

**Warnings**
Due to technical requirements, our products may contain dangerous substances. For information on the types in question, please contact your nearest Infineon Technologies office.

Except as otherwise explicitly approved by us in a written document signed by authorized representatives of Infineon Technologies, our products may not be used in any life-endangering applications, including but not limited to medical, nuclear, military, life-critical or any other applications where a failure of the product or any consequences of the use thereof can result in personal injury.