PRODUCT BRIEF

XDP700-002

6.5 V to -80 V Hot Swap Controller with a programmable digital SOA

XDP™ XDP700-002 is industry's first wide voltage range hot-swap controller with a programmable digital SOA control ideal for -48 V Pre-Isolated DC/DC Telecom infrastructure, Network routers, switches or applications requiring -24V/-48V input voltage support. XDP700-002 drives a single or multiple parallel N-Channel MOSFETs. In addition to a controlled turn ON, XDP700 provides continuous system health monitoring and communication to the main MCU via PMBus interface. The high-speed communication through PMBus allows system designers to disable the downstream sub-systems fully or partially. It incorporates an extensive variety of system protections for safety operation and generates various protection responses depending on the severity of the incident. Latch off, reset, system shutdown and retry are some examples of response types. Its SOA protection effectively ensures that the system FET always operates under safe condition.

Potential applications

- -48 V Pre-Isolated DC/DC Telecom infrastructure
- -24 V/-48 V Industrial systems
- Power distribution systems
- Intelligent e-fuse
- Network router and switches

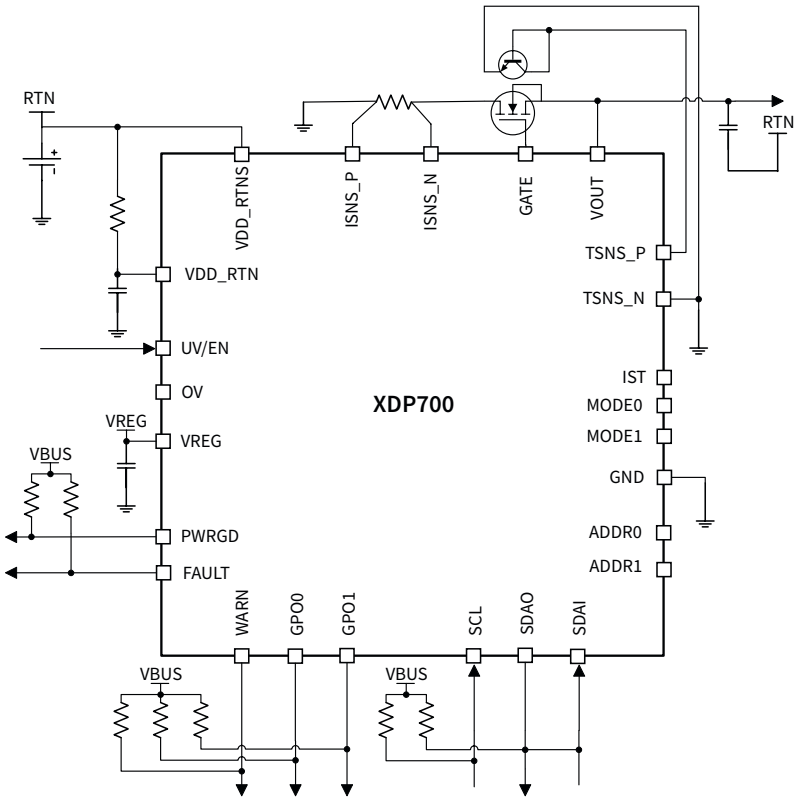

Key features

- Compatible with Infineon's OptiMOS™ and Linear FET
- Wide input voltage range: -6.5 V to -80 V (Transient withstand: up to -100 V for 500 ms)
- Dedicated current and voltage ADCs: 12-bit Programmable and pre-set FET active SOA protection
- Advanced closed-loop SOA control and the fully digital operating mode
- Integrated gate driver and charge pump for external N-Channel MOSFET
- Configurable fast FET's shut down: two step turn-off or 1.5 A pull-down current
- Precision input and output voltage monitoring and reporting: ≤0.5%
- Precision FET's current monitoring and reporting: ≤ 1.3%
- Precision input power monitoring and reporting: ≤ 1.8% and Energy monitoring and reporting of ≤5%
- Support for external temperature sensor and OT protection
- 29-lead (6 mm x 6 mm) VQFN package
- -40°C to 125°C junction temperature

Key features

- Digital configuration reduces external components
- Analog-Assisted Digital Mode for support of legacy systems
- Multiple SOA configuration profiles in NVM reduces design time
- Input transient & MOSFET SOA protection enables the use of smaller FETs
- Fast shut down of <1 µs
- Small package

In addition to its primary features, this device offers a range of features beyond its primary functions. For instance, it supports a wide range of FETs with SOA predefined in the chip and uses resistor strapping for selection. This simplifies the configuration and enables fast time-to-market solutions. The boost mode extends the external FET selection, enabling greater flexibility in configuration. Additionally, Analog-Assisted Digital Mode supports legacy systems to ensure compatibility with older equipment. The device also has programmable input and output OV and UV protections, preventing damage to the device or connected equipment due to voltage fluctuations. The fast over current detection protects the system from severe fault such as short circuit. Communication with other equipment is fast and efficient thanks to the PMBus interface, which operates at 1 MHz. Finally, there's the sequential turn-on capability, allowing for a controlled startup sequence that reduces stress on the device and connected equipment, making it a versatile choice for various applications.

Block diagram

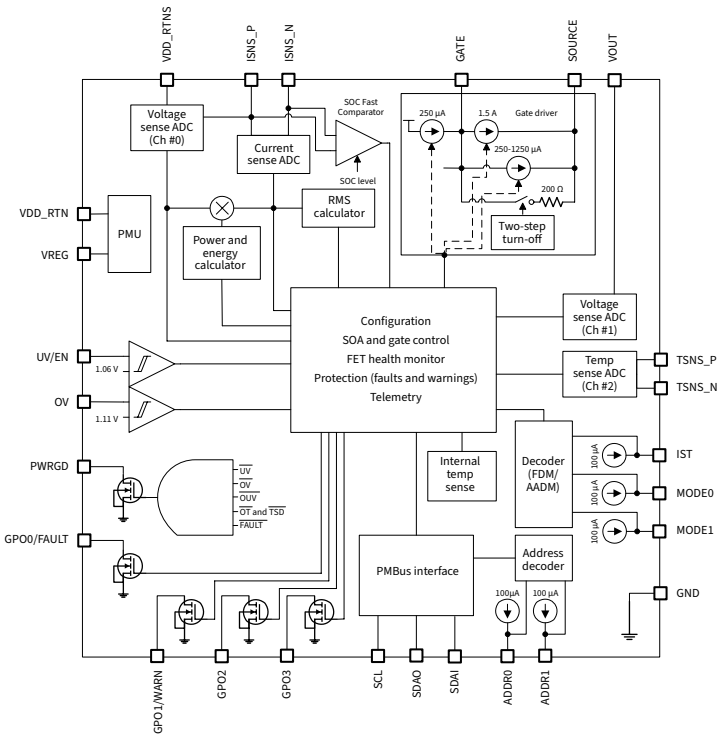

Published by
Infineon Technologies Austria AG
9500 Villach
Austria

© 2024 Infineon Technologies AG.
All rights reserved.

Public

Document number:
B188-I1480-V1-7600-EU-EC
Date: 03 / 2024

Scan QR code and explore offering
www.infineon.com

Please note!
This Document is for information purposes only and any information given herein shall in no event be regarded as a warranty, guarantee or description of any functionality, conditions and/or quality of our products or any suitability for a particular purpose. With regard to the technical specifications of our products, we kindly ask you to refer to the relevant product data sheets provided by us. Our customers and their technical departments are required to evaluate the suitability of our products for the intended application.

We reserve the right to change this document and/ or the information given herein at any time.

Additional information
For further information on technologies, our products, the application of our products, delivery terms and conditions and/or prices, please contact your nearest Infineon Technologies office (www.infineon.com).

Warnings
Due to technical requirements, our products may contain dangerous substances. For information on the types in question, please contact your nearest Infineon Technologies office.

Except as otherwise explicitly approved by us in a written document signed by authorized representatives of Infineon Technologies, our products may not be used in any life-endangering applications, including but not limited to medical, nuclear, military, life-critical or any other applications where a failure of the product or any consequences of the use thereof can result in personal injury.