PRODUCT BRIEF

RIC74424 evaluation board

Open loop dual output gate driver with R9 FETs

RIC7S113EVAL1 is an open loop board which features RIC74424, IRHNJ9A7130 and IRHNS9A7064. RIC74424 is a radiation hardened dual channel low side gate driver. IRHNJ9A7130 is 100 V, 35 A radiation hardened R9 FET and IRHNS9A7064 is a 60 V, 100 A radiation hardened R9 FET.

This board is optimal for quick benchtop evaluation of RIC74424. Both FETs have independent power stages, and they are configured to allow for timing measurements such as propagation delay, rise time and fall time.

Visit www.infineon.com/ric74424 to download the user guide and request samples.

Key features

- Power transistor footprint supports SMD-0.5, SMD-0.5e and SupIR-SMD™ package FETs
- Independent power stages configured for switching time test circuit allows for quick measurements of key timing at desired operating conditions
- PCB layout and test points optimized for ease of use for engineering evaluation

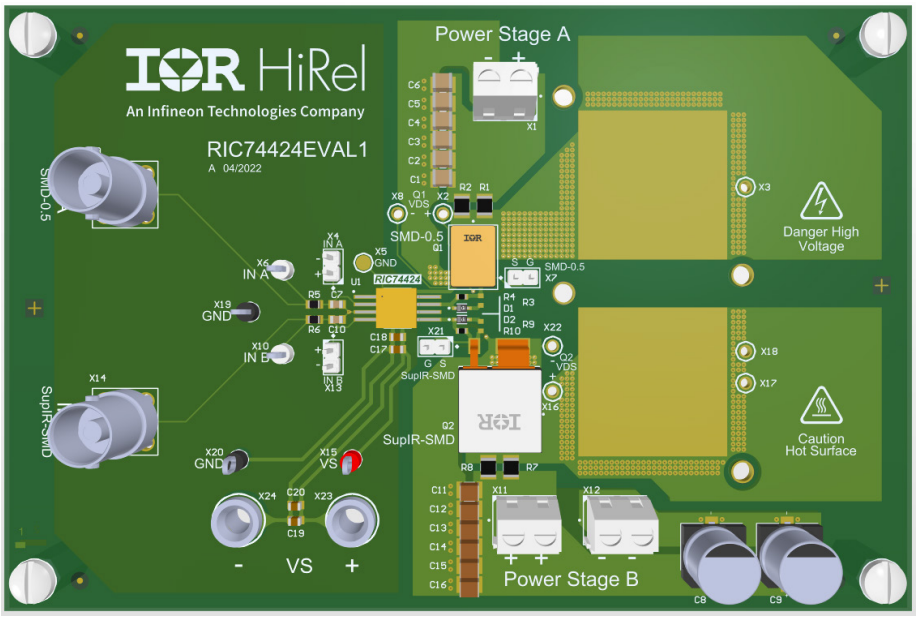

Space

Defense technology

PRODUCT BRIEF

RIC74424 evaluation board

Open loop dual output gate driver with R9 FETs

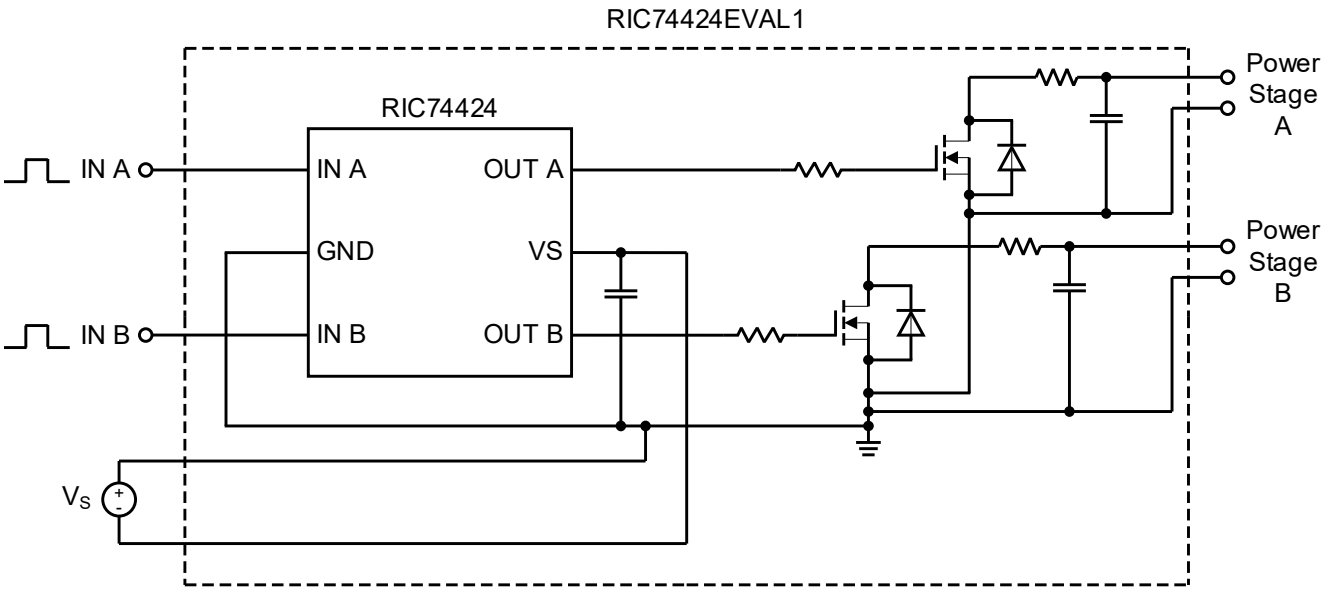

Published by
International Rectifier HiRel Products, Inc.
An Infineon Technologies Company
El Segundo, California 90245 USA

© 2023 Infineon Technologies AG
All rights reserved.

Public

Document number:

B119-I1296-7600-NA-EC-P

Date: 10/ 2023

Please note!
This Document is for information purposes only and any information given herein shall in no event be regarded as a warranty, guarantee or description of any functionality, conditions and/or quality of our products or any suitability for a particular purpose. With regard to the technical specifications of our products, we kindly ask you to refer to the relevant product data sheets provided by us. Our customers and their technical departments are required to evaluate the suitability of our products for the intended application.

We reserve the right to change this document and/ or the information given herein at any time.

Additional information
For further information on technologies, our products, the application of our products, delivery terms and conditions and/or prices, please contact your nearest Infineon Technologies office (www.infineon.com).

Warnings
Due to technical requirements, our products may contain dangerous substances. For information on the types in question, please contact your nearest International Rectifier HiRel Products, Inc., an Infineon Technologies office.

International Rectifier HiRel components may only be used in life-support devices or systems with the expressed written approval of International Rectifier HiRel Products, Inc., an Infineon Technologies company, if a failure of such components can reasonably be expected to cause the failure of that life-support device or system, or to affect the safety or effectiveness of that device or system.

Life support devices or systems are intended to be implanted in the human body, or to support and/ or maintain and sustain and/or protect human life. If they fail, it is reasonable to assume that the health of the user or other persons may be endangered.

Scan QR code and explore offering
www.infineon.com/hirel