PRODUCT BRIEF

RIC70849

Radiation hardened wide input buck controller optimized for GaN HEMTs

The RIC70849 is a radiation hardened (rad hard) wide input buck controller with integrated gate drivers designed to drive GaN HEMTs and meet the rigorous demands of space applications. It operates with an absolute maximum input voltage of 17.1 V, supporting a wide input range that facilitates flexible system architectures. The device provides a precise output voltage range from 0.6 V to 5.25 V, ideal for space-grade core rails. Its accurate voltage reference ensures stable regulation across temperatures and radiation environments.

The integrated half-bridge gate driver is tightly regulated at 4.8 V, optimized to work efficiently with rad hard GaN HEMTs. This integration reduces external component count and minimizes parasitic effects, leading to improved transient response. The load line regulation (LLR) feature further enhances performance by allowing for a reduction in output capacitor size, thereby saving board space and weight.

Fixed frequency peak current mode control and a wide programmable switching frequency allows designers to balance solution size and efficiency. A key feature of the RIC70849 is its small minimum on-time of 27 ns, supporting high step-down voltage ratios without sacrificing stability. The device incorporates integrated fault protection and a programmable soft-start function, enhancing system reliability and the overall design process.

Packaged in an hermetically sealed 24-lead flatpack with operation over the full military ambient temperature range of -55°C to 125°C, the RIC70849 combines high-performance power management with essential radiation protection, offering a reliable solution for next-generation space systems.

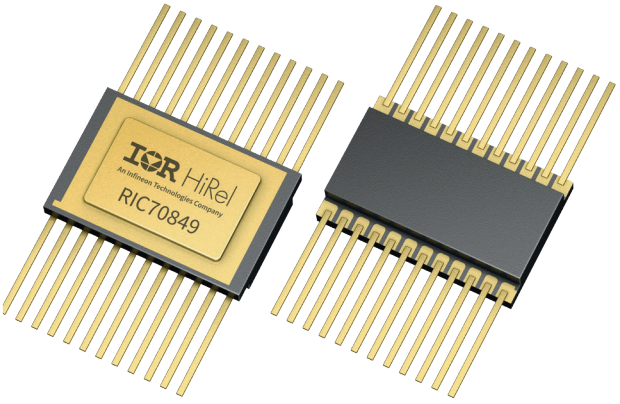

24-lead flatpack

Key features

- Wide supply voltage range: 5 V to 12 V nominal
- Wide output voltage range: 0.6 V to 5.25 V nominal
- Integrated 4.8 V half-bridge gate driver optimized for rad hard GaN HEMT
- TID: 100 krad(Si)
- SEE: SEL, SEB, SEGR, and SET characterized up to LET 81.9 MeV·cm2/mg
- Temperature rating: -55°C to 125°C
- Hermetically sealed 24-lead flatpack package
- Electronically screened and qualified to MIL-PRF-38535, Class V (DLA pending)

Target applications

- GaN-based Point of Load (PoL) converter for space grade FPGA, ASIC, and DSP core rails
- Digital processing payload systems
- Distributed satellite power systems

www.infineon.com/hirel

Space

PRODUCT BRIEF

RIC70849

Radiation hardened wide input buck controller optimized for GaN HEMTs

Infineon IR HiRel's rad hard IC portfolio targets all space grade PoL applications, providing enhanced compatibility for Si FETs and GaN transistors. Visit infineon.com/ric70847 to learn more about our partner device, the RIC70847.

Space power architecture

A schematic of RIC70849 in a typical PoL application

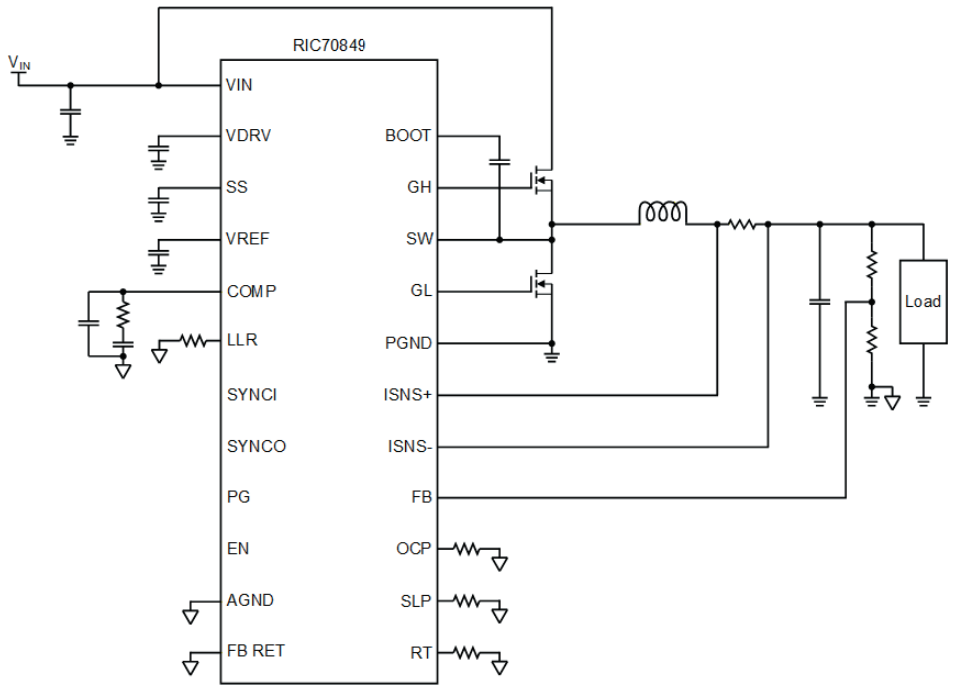

Product table

Orderable part number	Package type	Device level	Total ionizing dose level
5962R2320602VXA	24-lead flatpack	Level V[1,3]	100 krad(Si)
RIC70849F	24-lead flatpack	COTS[2]	–

[1] Per MIL-PRF-38535
[2] Intended for engineering evaluation only, devices are only tested at 25°C and for hermeticity
[3] MIL-PRF-38535 QMLV certification pending

www.infineon.com/hirel

Published by
International Rectifier HiRel Products, Inc.
An Infineon Technologies Company
El Segundo, California 90245 USA

© 2026 Infineon Technologies AG
All rights reserved.

Public
Date: 07/2026

Please note!
This Document is for information purposes only and any information given herein shall in no event be regarded as a warranty, guarantee or description of any functionality, conditions and/or quality of our products or any suitability for a particular purpose. With regard to the technical specifications of our products, we kindly ask you to refer to the relevant product data sheets provided by us. Our customers and their technical departments are required to evaluate the suitability of our products for the intended application.

We reserve the right to change this document and/or the information given herein at any time.

Additional information
For further information on technologies, our products, the application of our products, delivery terms and conditions and/or prices, please contact your nearest Infineon Technologies office (www.infineon.com).

Warnings
Due to technical requirements, our products may contain dangerous substances. For information on the types in question, please contact your nearest Infineon Technologies office.

Infineon Technologies Components may only be used in life-support devices or systems with the expressed written approval of Infineon Technologies, if a failure of such components can reasonably be expected to cause the failure of that life-support device or system, or to affect the safety or effectiveness of that device or system.

Life support devices or systems are intended to be implanted in the human body, or to support and/or maintain and sustain and/or protect human life. If they fail, it is reasonable to assume that the health of the user or other persons may be endangered.