IR HiRel
An Infineon Technologies Company

Product brief

Rad hard gate drivers

Increase reliability, reduce solution size & weight

Engineered to complement our rad hard MOSFETs, IR HiRel's radiation-hardened (rad hard) high-side and low-side MOSFET drivers are rated at 100krad(Si) for total ionizing dose (TID) and have been characterized for single event effects (SEE). These gate drivers feature a wide operating supply range up to 20V, low propagation delay and high drive currents. Increase reliability and reduce solution size and weight by replacing bulky magnetic or opto-coupler based gate driver designs with IR HiRel's space-grade gate drivers.

RIC7S113 rad hard high- and low-side 400V gate driver

RIC7S113 is a high-voltage, high-speed power MOSFET driver with independent high and low side referenced output channels. Proprietary HVIC and latch immune CMOS technologies enable ruggedized monolithic construction. Logic inputs are compatible with standard CMOS or LSTTL levels. The output drivers feature a powerful high pulse current buffer stage designed to drive large gate capacitance high voltage MOSFETs. Propagation delays are matched to simplify use in high frequency applications. The floating channel, which operates up to 400 volts, can be used to drive an N-channel power MOSFET in the high side configuration.

Radiation hardness

- Total ionizing dose (TID) capability to 100krad(Si)
- Characterized for destructive single event effects (SEE) to LET 50.4 MeV · cm²/mg

Package options

- 14 lead dual flatpack
- 14 lead MO-036AB
- 18 lead CLCC

Typical application diagram

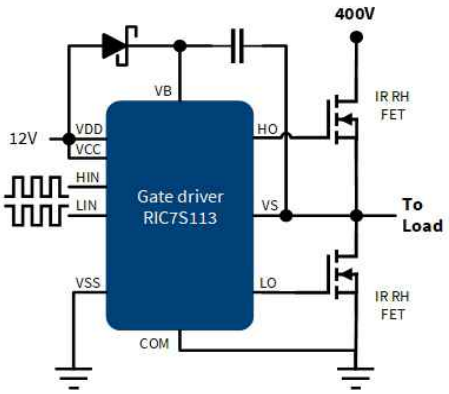

Key feature

- Floating high-side driver supports 400V operation
- Gate drive voltage range 10V to 20V
- Independent supply voltage range 5V to 20V
- Matched propagation delay of 5ns (typ.)

Customer benefits

- 400V capability enables replacement of bulky magnetic or opto-coupler gate driver designs
- Matched delays simplifies high switching frequency applications
- Wide supply range for input level compatibility with all rad hard PWM controllers
- 50V/ns transient immunity for robust latch-up free high-side switching

Space

Defense technology

www.infineon.com/irhirel

Rad hard gate drivers

Increase reliability, reduce solution size & weight

RIC74424 rad hard non-inverting dual output MOSFET drivers

RIC74424 is a monolithic, rad hard dual high-speed MOSFET driver designed specifically to drive all of IR HiRel's radiation hardened power MOSFETs. Applications for this driver include switching power supplies, motor controllers, synchronous rectification and other power applications where ultra-fast switching speed and fast propagation response time is imperative to boost the circuit efficiency. The driver is compatible with most logic devices and can be interfaced directly with industry standard pulse width modulator (PWM) controllers such as the 1825, 1844 and 1856 product families.

Radiation hardness

- Total ionizing dose (TID) capability to 100krad(Si)
- Low dose rate (ELDRS) characterized to 50krads
- Characterized for destructive single event effects (SEE) to LET 82 MeV · cm²/mg

Package options

- 8-lead ceramic dual flatpack

Typical application diagram

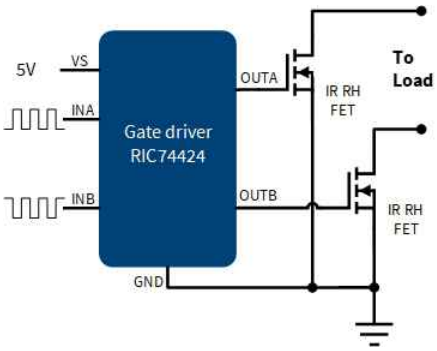

Key features

- Wide supply range 5V to 20V
- 3A peak sink and source capability
- Ultra-low quiescent current 900µA (max.)
- Low propagation delay
  – 100ns turn-on delay
  – 85ns turn-off delay

Customer benefits

- Supply voltage range enables compatibility with logic level and traditional MOSFETs
- Low quiescent current reduces static power consumption by 60% compared to the competition
- Reduce switching losses with fast rise and fall times
- Compatible with industry standard rad hard PWM controllers

Rad hard gate drivers package overview

14-lead flatpack	MO-036AB	LCC-18	8-lead flatpack
			

www.infineon.com/irhirel

Published by
International Rectifier HiRel Products, Inc.
An Infineon Technologies Company
El Segundo, California 90245 USA

© 2020 Infineon Technologies AG.
All Rights Reserved.

Document number: B119-I1098-V2-7600-NA-EC-P
Date: 2/2021

Please note!
This Document is for information purposes only and any information given herein shall in no event be regarded as a warranty, guarantee or description of any functionality, conditions and/or quality of our products or any suitability for a particular purpose. With regard to the technical specifications of our products, we kindly ask you to refer to the relevant product data sheets provided by us. Our customers and their technical departments are required to evaluate the suitability of our products for the intended application.

We reserve the right to change this document and/or the information given herein at any time.

Additional information
For further information on technologies, our products, the application of our products, delivery terms and conditions and/or prices, please contact your nearest Infineon Technologies office (www.infineon.com).

Warnings
Due to technical requirements, our products may contain dangerous substances. For information on the types in question, please contact your nearest International Rectifier HiRel Products, Inc., an Infineon Technologies company, office.

International Rectifier HiRel components may only be used in life-support devices or systems with the expressed written approval of International Rectifier HiRel Products, Inc., an Infineon Technologies company, if a failure of such components can reasonably be expected to cause the failure of that life-support device or system, or to affect the safety or effectiveness of that device or system.

Life support devices or systems are intended to be implanted in the human body, or to support and/or maintain and sustain and/or protect human life. If they fail, it is reasonable to assume that the health of the user or other persons may be endangered.