PRODUCT BRIEF

IRHYS9A97034CM evaluation board

Inrush current limiter using R9 P-channel MOSFET

IRHYS9A97034EVAL1 is an evaluation board to help evaluate radiation hardened (rad hard) R9 P-channel MOSFETs in linear mode application. IRHYS9A97034EVAL1 features IRHYS9A97034CM which is a 60 V, 30 A R9 P-channel MOSFET in TO-257AA low ohmic package. The board also features IRHLUB770Z4 which is a 60 V, 0.8 A, R7, logic-level, rad hard N-channel MOSFET.

This evaluation board is designed to help the user evaluate P-channel MOSFETs in TO-257AA package in an inrush current limiter circuit configuration. Passive components on the board can be adjusted to change inrush current peak and/or charging time.

Visit www.infineon.com/IRHYS9A97034EVAL1 to download the user guide and request samples.



Key features

- Support 28 V bus input
- Supports peak inrush current up to 9.5 A at TA = 25°C
- Supports 3.3 V or 5 V control logic to turn-on or turn-off power MOSFET
- Power transistor footprint supports low ohmic TO-257AA and tabless TO-257AA package devices
- Adjustable inrush current peak and charging time with passive components
- On-board rectifier diode footprint for inductive loads
- PCB layout and test points optimized for ease of use for engineering evaluation

Space

Defense technology

PRODUCT BRIEF

IRHYS9A97034CM evaluation board

Inrush current limiter using R9 P-channel MOSFET

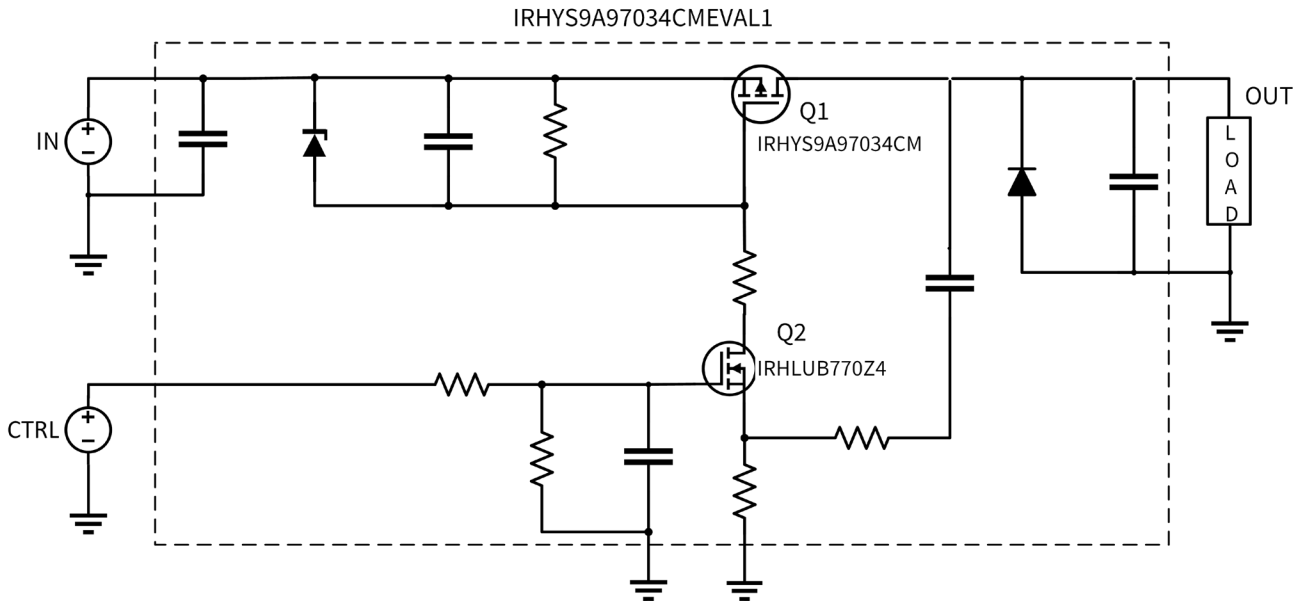

Published by
International Rectifier HiRel Products, Inc.
An Infineon Technologies Company
El Segundo, California 90245 USA

© 2023 Infineon Technologies AG
All rights reserved.

Public

Document number:

B119-I1366-7600-NA-EC-P

Date: 10/ 2023

Please note!
This Document is for information purposes only and any information given herein shall in no event be regarded as a warranty, guarantee or description of any functionality, conditions and/or quality of our products or any suitability for a particular purpose. With regard to the technical specifications of our products, we kindly ask you to refer to the relevant product data sheets provided by us. Our customers and their technical departments are required to evaluate the suitability of our products for the intended application.

We reserve the right to change this document and/ or the information given herein at any time.

Additional information
For further information on technologies, our products, the application of our products, delivery terms and conditions and/or prices, please contact your nearest Infineon Technologies office (www.infineon.com).

Warnings
Due to technical requirements, our products may contain dangerous substances. For information on the types in question, please contact your nearest International Rectifier HiRel Products, Inc., an Infineon Technologies office.

International Rectifier HiRel components may only be used in life-support devices or systems with the expressed written approval of International Rectifier HiRel Products, Inc., an Infineon Technologies company, if a failure of such components can reasonably be expected to cause the failure of that life-support device or system, or to affect the safety or effectiveness of that device or system.

Life support devices or systems are intended to be implanted in the human body, or to support and/ or maintain and sustain and/or protect human life. If they fail, it is reasonable to assume that the health of the user or other persons may be endangered.

Scan QR code and explore offering
www.infineon.com/hirel