PRODUCT BRIEF

CoolSET™ SiP

In DSO-27 package

The newly launched CoolSET™ SiP family products support a highly effective reduction in system complexity. The System in Package (SiP) integration includes a high-voltage power switch, a primary and a secondary controller, as well as isolated communication. The integrated controller is the enabler for more sophisticated end user products. This results in a high amount of discrete system components reduction and lower BOM. An advanced set of protection features supports ease of design-in and allows our customers to rethink their products and offer better user experience. Extended design-in flexibility is enabled by external settings. The product is qualified for industrial applications according to the relevant tests of JEDEC47/20/22 and is used for auxiliary power supplies in consumer and industrial applications.

Overview of features

- Integrated 800 V avalanche rugged CoolMOS™ P7
- Fast start-up with integrated 950 V high voltage startup-cell
- Integrated synchronous rectification (SR) driver with typical 10 V output
- Integrated reinforced isolated communication via CT Link technology from secondary to primary side
- Novel zero voltage switching (ZVS) flyback operation for lowest switching losses and low EMI signature
- Supports primary side wide V_{CC} operating range up to 32 V
- Optimized low supply currents for hysteretic mode operation to reach stand-by power < 30 mW
- Built-in primary side digital quasi-resonant soft-start
- Built-in secondary side feedback control loop with error amplifier
- Multi-mode control for optimized efficiency across the entire load range
- Minimum switching frequency variation between low and high line
- Maximum on/off time limitation to suppress audible noise during
- Primary side cycle-by-cycle maximum peak current limitation
- Primary side Rshunt short circuit protection
- Robust input voltage protection with input OVP and brownout
- Auto restart mode protection for VCC over/voltage undervoltage, overload/open-loop, line/output, overvoltage, overtemperature
- Pb-free lead plating, halogen-free mold compound, RoHS compliant



Key features

- Integrated 800 V avalanche rugged CoolMOS™ P7 and 950 V high voltage startup-cell
- Novel ZVS flyback operation
- Built-in primary side power switch control and secondary side feedback control
- Integrate primary and secondary functionality with robust CT Link technology for reinforced isolation
- Integrated SR and 15 V LDO enable pin
- Meet the stringiest energy standards with > 92% efficiency and < 30 mW stand-by
- Enable output power up to 60W in small DSO package

Key benefits

- Reduction of component count, system complexity, space and cost
- Fast and robust start-up
- Low switching losses and low EMI signature
- High reliability, robust operation and high performance
- Extended design-in flexibility
- Safe isolated communication between primary and secondary side
- Limited audible noise during startup and power down

Industrial | Consumer | AUX power | Washing machine | Aircon | Heating | Server

www.infineon.com/coolset-sip

CoolSET™ SiP

In DSO-27 package

Typical application of CoolSET™ SiP [ICE18xEM]

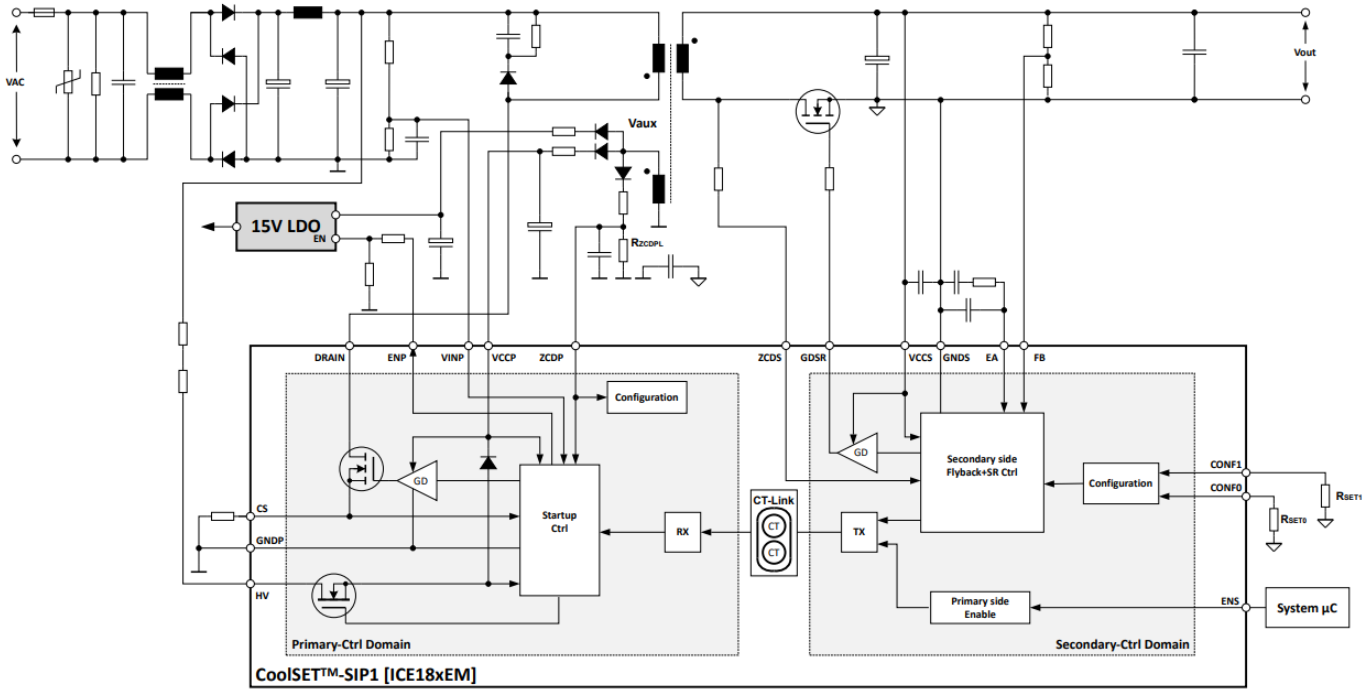

Typical application of CoolSET™ SiP [ICE1xxLM]

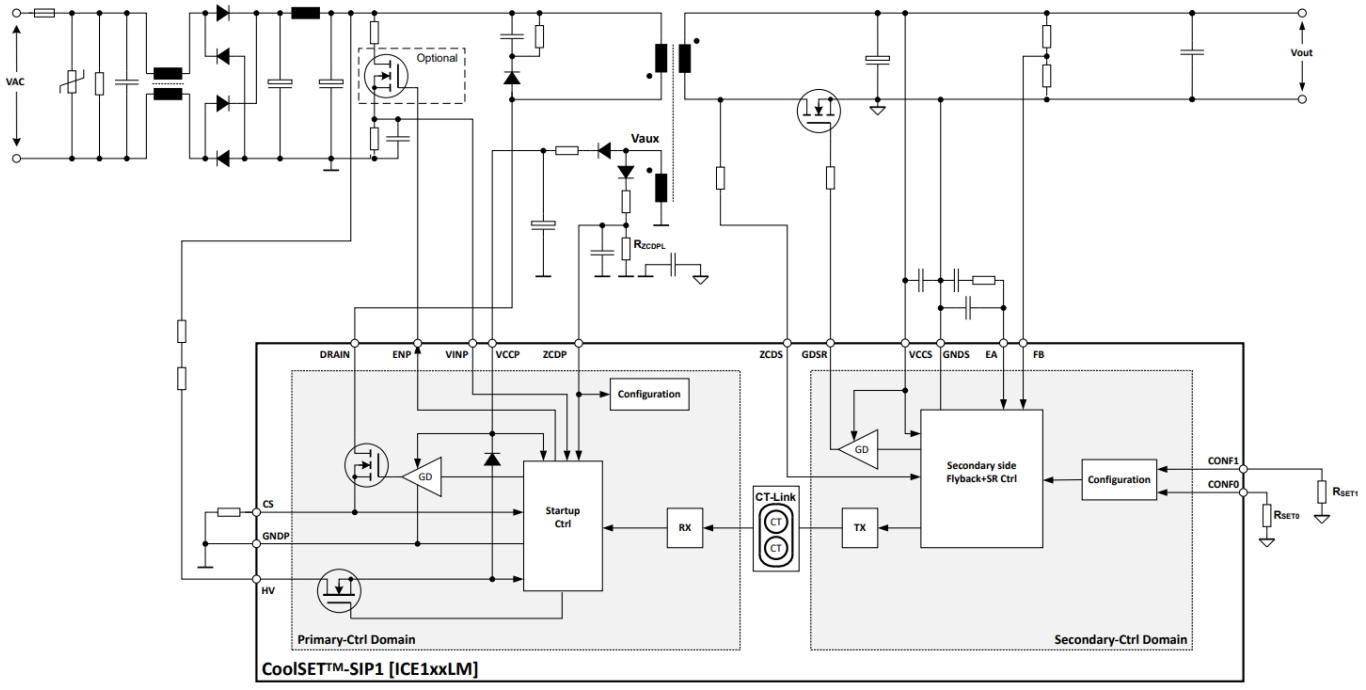

CoolSET™ SiP

In DSO-27 package

Output power of CoolSET™ SiP

Type	Package	Marking	Variant	V_{DS}	$R_{DS(on)}$	220 V_{AC} ±20%	85-320 V_{AC}
ICE184EM	PG-DSO-27-1	ICE184EM	Enable ENS	800 V	0.84 Ω	68 W	45 W
ICE184LM	PG-DSO-27-1	ICE184LM	Lite	800 V	0.84 Ω	68 W	45 W
ICE186EM	PG-DSO-27-1	ICE186EM	Enable ENS	800 V	0.48 Ω	89 W	60 W

www.infineon.com

Published by
Infineon Technologies AG
Am Campeon 1-15, 85579 Neubiberg
Germany

© 2025 Infineon Technologies AG
All rights reserved.

Public

Date: 04/2025

Please note!
This Document is for information purposes only and any information given herein shall in no event be regarded as a warranty, guarantee or description of any functionality, conditions and/or quality of our products or any suitability for a particular purpose. With regard to the technical specifications of our products, we kindly ask you to refer to the relevant product data sheets provided by us. Our customers and their technical departments are required to evaluate the suitability of our products for the intended application.

We reserve the right to change this document and/or the information given herein at any time.

Additional information
For further information on technologies, our products, the application of our products, delivery terms and conditions and/or prices, please contact your nearest Infineon Technologies office (www.infineon.com).

Warnings
Due to technical requirements, our products may contain dangerous substances. For information on the types in ques-tion, please contact your nearest Infineon Technologies office.

Except as otherwise explicitly approved by us in a written document signed by authorized representatives of Infineon Technologies, our products may not be used in any life-endangering applications, including but not limited to medical, nuclear, military, life-critical or any other applications where a failure of the product or any consequences of the use thereof can result in personal injury.